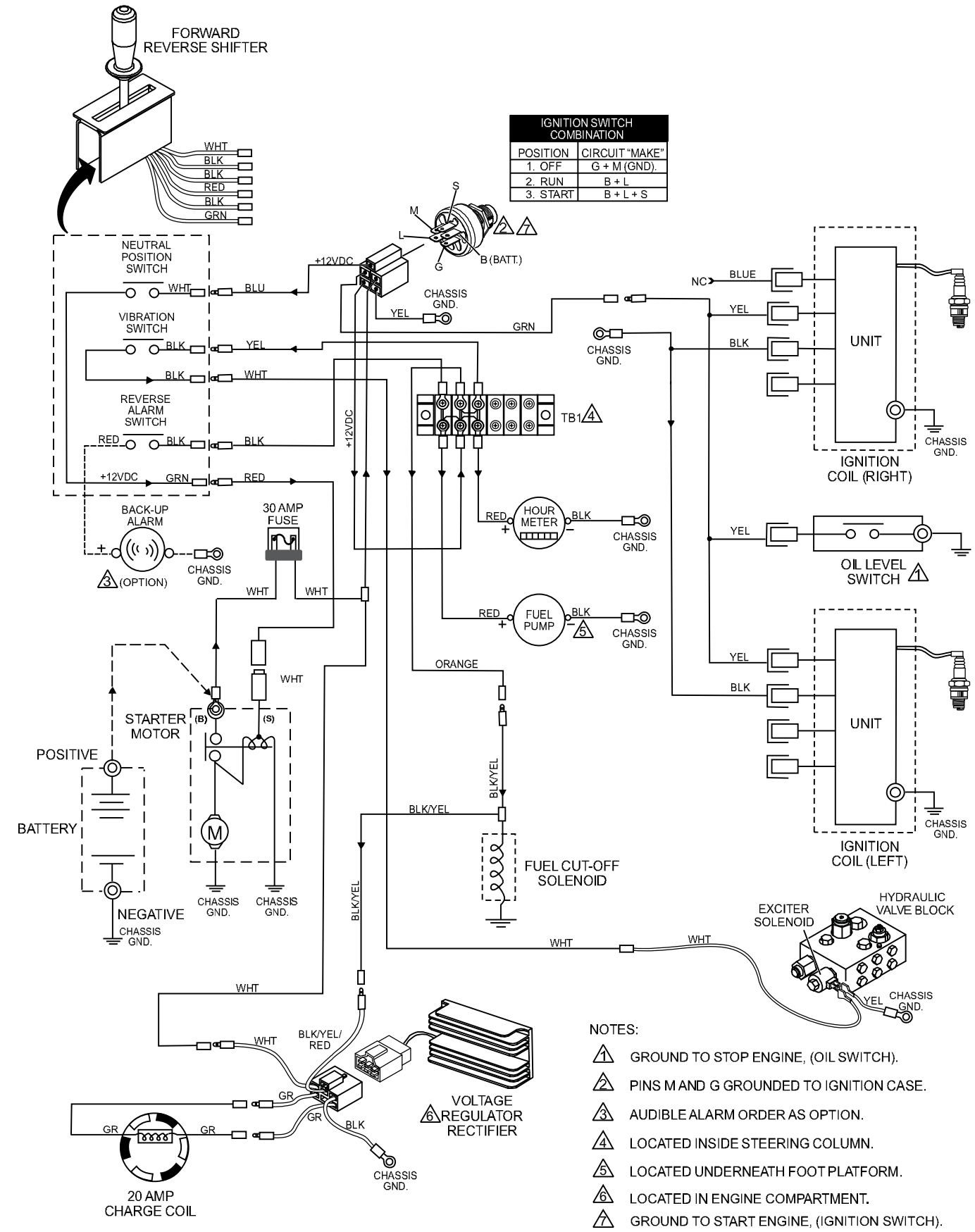
FORWARD
REVERSE SHIFTER
WHT
BLK
BLK
RED
BLK
GRN
IGNITION SWITCH COMBINATION
POSITION | CIRCUIT "MAKE"
1. OFF | G + M (GND).
2. RUN | B + L
3. START | B + L + S
S
M
L
G
B (BATT.)
2
7
NEUTRAL POSITION SWITCH
WHT
BLU
+12VDC
CHASSIS GND.
YEL
GRN
VIBRATION SWITCH
BLK
YEL
BLK
WHT
REVERSE ALARM SWITCH
RED
BLK
BLK
+12VDC
GRN
RED
TB1 4
NC
BLUE
YEL
BLK
UNIT
CHASSIS GND.
IGNITION COIL (RIGHT)
BACK-UP ALARM
3 (OPTION)
30 AMP FUSE
WHT
WHT
HOUR METER
RED
BLK
OIL LEVEL SWITCH 1
FUEL PUMP
5
ORANGE
STARTER MOTOR
(B)
(S)
POSITIVE
BATTERY
NEGATIVE
M
BLK/YEL
FUEL CUT-OFF SOLENOID
IGNITION COIL (LEFT)
EXCITER SOLENOID
HYDRAULIC VALVE BLOCK
BLK/YEL/ RED
VOLTAGE 6 REGULATOR RECTIFIER
GR
20 AMP CHARGE COIL
NOTES:
1 GROUND TO STOP ENGINE, (OIL SWITCH).
2 PINS M AND G GROUNDED TO IGNITION CASE.
3 AUDIBLE ALARM ORDER AS OPTION.
4 LOCATED INSIDE STEERING COLUMN.
5 LOCATED UNDERNEATH FOOT PLATFORM.
6 LOCATED IN ENGINE COMPARTMENT.
7 GROUND TO START ENGINE, (IGNITION SWITCH).