OPERATION AND PARTS MANUAL

WHITEMAN

CA4-4H WALK-BEHIND TROWEL

EXPORT VERSION

ORIGINAL INSTRUCTIONS

MODEL # _____

SERIAL # _____

Revision #0 (03/23/04)

MULTIQUIP

Atlanta • Boise • Newark • Montreal, Canada • Manchester, UK Rio De Janiero, BR • Puebla, MX

MULTIQUIP (UK)
HANOVER MILL
FITZROY STREET
ASHTON-UNDER-LYNE
LANCASHIRE, OL7 OTL
UNITED KINGDOM
PH. 0161-339-2223
FAX. 0161-339-3226
E-MAIL: mq@multiquip.com
www.multiquip.com

P/N 21619

HERE'S HOW TO GET HELP

PLEASE HAVE THE MODEL AND SERIAL NUMBER *ON-HAND* WHEN CALLING

UNITED STATES

MULTIQUIP CORPORATE OFFICE

18910 Wilmington Ave.
Carson, CA 90746
Contact: mq@multiquip.com

Tel. (800)-421-1244
Fax (310)-537-3927

MEXICO

MQ CIPSA

Carr. Fed. Mexico-Puebla KM 126.5
Momoxpan, Cholula, Puebla 72760 Mexico
Contact: pmastretta@cipsa.com.mx

Tel. (52) 222-225-9900
Fax (52) 222-285-0420

UNITED KINGDOM

MULTIQUIP (UK) LIMITED HEAD OFFICE

Hanover Mill, Fitzroy Street,
Ashton-under-Lyne,
Lancashire OL7 0TL
Contact: kcassell@multiquip.com.uk

Tel. 0161 339 2223
Fax 0161 339 3226

CANADA

MULTIQUIP

4110 Industriel Boul.
Laval, Quebec, Canada H7L 6V3
Contact: jmartin@multiquip.com

Tel. (450) 625-2244
Fax (450) 625-8664

BRAZIL

MULTIQUIP

Av. Evandro Lins e Silva, 840 - grupo 505
Barra de Tijuca - Rio de Janeiro
RJ CEP 22631-470
Contact: cnavarro@multiquip.com.br, srentes@multiquip.com.br

Tel. 011-55-21-3433-9055
Fax 011-55-21-3433-9055

Visit our website at: www.multiquip.com

Your Local Dealer is:

MULTIQUIP

MQ WHITEMAN CA4-4H WALK-BEHIND TROWEL

Component Drawings

Honda GX120K1QX2 Engine

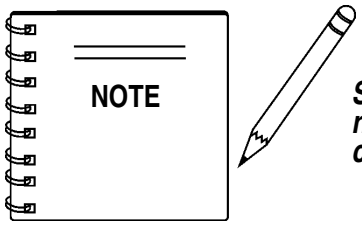

Specifications and part numbers are subject to change without notice.

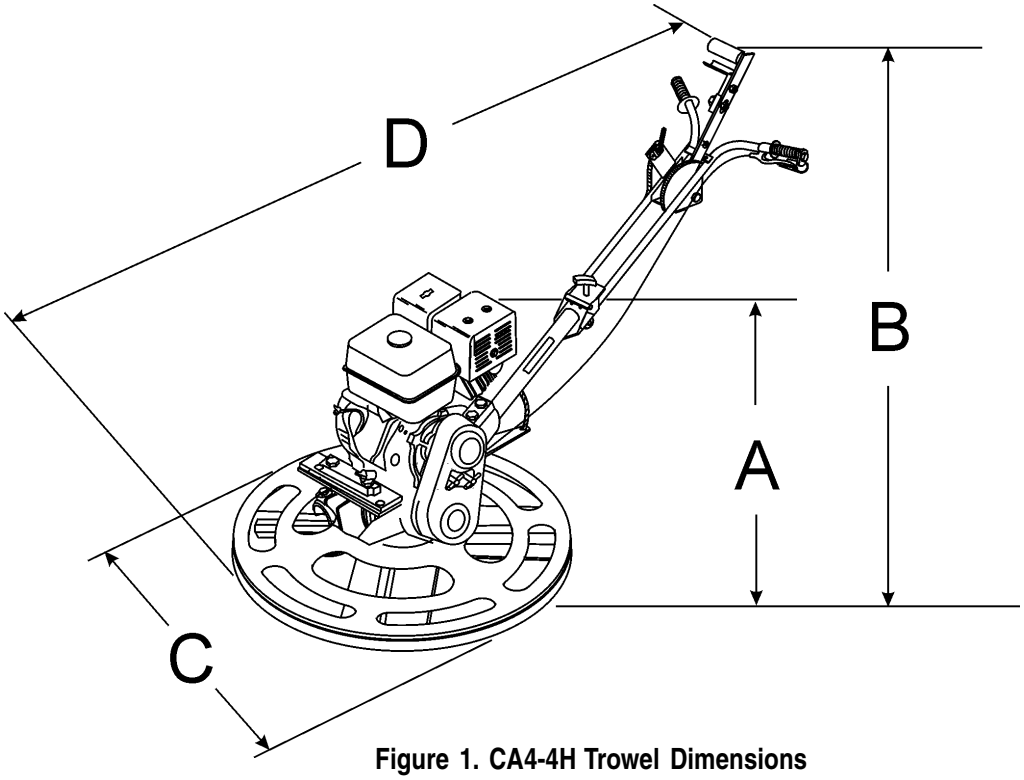

Figure 1. CA4-4H Trowel Dimensions

Table 1. CA4-4H Trowel Dimensions & Weight	
A- Height (Lifting Bale)	711 mm (28.0 in.)
B - Height (Engagement Lever)	921 mm (36.25 in.)
C - Width	610 mm (24 in.)
D - Length	1.55 m (5.08 ft.)
Weight	57 kg (125 lbs.)

Table 2. CA4-4H Trowel Specifications

Number of Blades	4
Ring Diameter	610 mm (24.0 in.)
Rotor	70-130 RPM
Path Width	610 mm (24.0 in.)
Vibration (Hand/Arm)[1]	3.85 m/s^2
Sound Pressure (A-Weighted)[2]	83.5 dB(A)
Sound Pressure (Peak, C-Weighted)	90.5 dB(C)
Sound Power Level (A-Weighted)	97 dB(A)

NOTE:

1. The vibration level indicated is the maximum RMS (Root Mean Square) value obtained at the handle grip while operating the walk-behind trowel at full throttle on steel plate with blades partially pitched.
2. Sound pressure is a weighted measure. It is measured at the operator's ear position while the walk-behind trowel is operating at full throttle on concrete in a manner most often experienced in "***normal***" circumstances. Sound pressure may vary depending upon the condition of the concrete.

Table 3. Engine Specifications

Engine	**Model**	**HONDA GX120K1QX2**
	Type	4-stroke, Overhead valve, Single Cylinder
	Bore X Stroke	60 mm x 42 mm (2.4 in. X 1.7 in.)
	Displacement	119 cc (7.3 cu. in.)
	Max Output	2.9 kW (3.9 H.P.) at 3,600 R.P.M.
	Fuel Tank Capacity	Approx. 2.5 Liters (0.66 U.S. Gallons)
	Standard Idle Speed	1,400 +200/-150 R.P.M.
	Fuel	Unleaded Gasoline
	Lube Oil Capacity	0.60 Liters (0.63 U.S. Quarts)
	Speed Control Method	Centrifugal Fly-weight Type
	Starting Method	Recoil Start
Dimension (L x W x H)		297 X 341 X 318 mm (11.7 x 13.4 X 12.5 in.)
Dry Net Weight		13.0 Kg (28.7 lbs.)

NOTE PAGE

TRAINING CHECKLIST

This checklist will lists some of the minimum requirements for machine maintenance and operation. Please feel free to detach it and make copies. Use this checklist whenever a new operator is to be trained or it can be used as a review for more experienced operator's.

TRAINING CHECKLIST			
NO.	DESCRIPTION	OK?	DATE
1	Read Operator's Manual completely.		
2	Machine layout, location of components, checking of engine and gearbox fluid level.		
3	Fuel system, refueling procedure.		
4	Operation of controls (machine not running).		
5	Safety controls, clutch operation.		
6	Emergency stop procedures.		
7	Startup of machine.		
8	Maneuvering.		
9	Pitching.		
10	Concrete finishing techniques.		
11	Shutdown of machine.		
12	Lifting of machine.		
13	Machine transport and storage.		

Operator _____ Trainee _____

COMMENTS:

DAILY PRE-OPERATION CHECKLIST

DAILY PRE-OPERATION CHECKLIST		✓	✓	✓	✓	✓	✓
1	Engine Oil Level.						
2	Gearbox Fluid Level.						
3	Condition of Blades.						
4	Blade Pitch Operation.						
5	Clutch Operation.						

COMMENTS:

FOR YOUR SAFETY AND THE SAFETY OF OTHERS!

Safety precautions should be followed at all times when operating this equipment. Failure to read and understand and comply with the Safety Messages and Operating Instructions could result in injury to yourself and others.

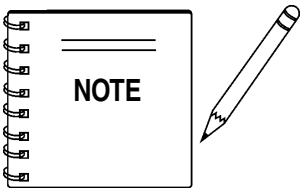

This Owner's Manual has been developed to provide complete instructions for the safe and efficient operation of the MQ Whiteman CA4-4H TROWEL. For engine maintenance information, please refer to the engine manufacturers instructions for data relative to its safe operation.

Before using this WALK-BEHIND TROWEL, ensure that the operating individual has read and understands all instructions in this manual.

SAFETY MESSAGE ALERT SYMBOLS

The three (3) Safety Messages shown below will inform you about potential hazards that could injure you or others. The Safety Messages specifically address the level of exposure to the operator, and are preceded by one of three words: **DANGER**, **WARNING**, or **CAUTION**.

DANGER

You **WILL** be ***KILLED*** or ***SERIOUSLY INJURED*** if you **DO NOT** follow these directions.

WARNING

You **CAN** be **KILLED** or ***SERIOUSLY INJURED*** if you **DO NOT** follow these directions.

CAUTION

You **CAN** be ***INJURED*** if you **DO NOT** follow these directions.

Potential hazards associated with CA4-4H TROWEL operation will be referenced with **Hazard Symbols** which appear throughout this manual, and will be referenced in conjunction with **Safety Message Alert Symbols**.

HAZARD SYMBOLS

Lethal Exhaust Gases

Engine exhaust gases contain poisonous carbon monoxide. This gas is colorless and odorless, and can cause death if inhaled. **NEVER** operate this equipment in a confined area or enclosed structure that does not provide ample free flow air.

Explosive Fuel

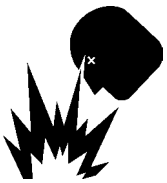

Gasoline is extremely flammable, and its vapors can cause an explosion if ignited. **DO NOT** start the engine near spilled fuel or combustible fluids. **DO NOT** fill the fuel tank while the engine is running or hot. **DO NOT** overfill tank, since spilled fuel could ignite if it comes into contact with hot engine parts or sparks from the ignition system. Store fuel in approved containers, in well-ventilated areas and away from sparks and flames. **NEVER** use fuel as a cleaning agent.

Burn Hazards

Engine components can generate extreme heat. To prevent burns, **DO NOT** touch these areas while the engine is running or immediately after operations. **NEVER** operate the engine with heat shields or heat guards removed.

Rotating Parts

NEVER operate equipment with covers, or guards removed. Keep ***fingers, hands***, ***hair*** and ***clothing*** away from all moving parts to prevent injury.

CA4-4H TROWEL— SAFETY MESSAGE ALERT SYMBOLS

Accidental Starting

ALWAYS place the engine **ON/OFF** switch in the **OFF** position, when the trowel is not in use.

Over Speed Conditions

NEVER tamper with the factory settings of the engine governor or settings. Personal injury and damage to the engine or equipment can result if operating in speed ranges above maximum allowable.

Respiratory Hazard

ALWAYS wear approved respiratory protection.

Sight and Hearing hazard

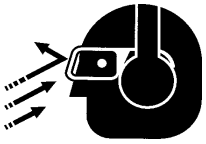

ALWAYS wear approved eye and hearing protection.

Equipment Damage Messages

Other important messages are provided throughout this manual to help prevent damage to your trowel, other property, or the surrounding environment.

CAUTION

This walk-behind trowel, other property, or the surrounding environment could be damaged if you do not follow instructions.

RULES FOR SAFE OPERATION

⚠ WARNING

Failure to follow instructions in this manual may lead to serious injury or even death! This equipment is to be operated by trained and qualified personnel only! This equipment is for industrial use only.

The following safety guidelines should always be used when operating the CA4-4H.

SAFETY

- **DO NOT** operate or service this equipment before reading this entire manual. The manual must be kept available and accessible to the operator.
- This equipment should not be operated by persons under the minimum statutory age limit.
- **NEVER** use this machine for any purpose other than those described in this manual.
- **NEVER** operate the trowel without proper protective clothing, shatterproof glasses, steel-toed boots and other protective devices required for the job.





- **NEVER** use accessories or attachments which are not recommended by Multiquip for this equipment. Damage to the equipment and/or injury to user may result.
- Manufacturer does not assume responsibility for any accident due to equipment modifications. Unauthorized equipment modification will void all warranties. Any modification which could lead to a change in the original characteristics of the machine should be made only by the manufacturer who shall confirm that the machine is in conformity with appropriate safety regulations.
- **NEVER** operate this equipment when not feeling well due to fatigue, illness or taking medicine.
- **NEVER** operate the trowel under the influence or drugs or alcohol.
- Replace nameplate, operation and safety decals when they become difficult to read.
- **ALWAYS** check the trowel for loosened hardware such as nuts and bolts before starting.
- **NEVER** touch the hot exhaust manifold, muffler or cylinder. Allow these parts to cool before servicing the trowel.

- **High Temperatures** – Allow the engine to cool before adding fuel or performing service and maintenance functions. Contact with ***hot!*** components can cause serious burns.
- The engine of this trowel requires an adequate free flow of cooling air. **NEVER** operate the trowel in any enclosed or narrow area where free flow of the air is restricted. If the air flow is restricted it will cause serious damage to the engine and may cause injury to people. Remember the engine gives off ***DEADLY*** carbon monoxide gas.

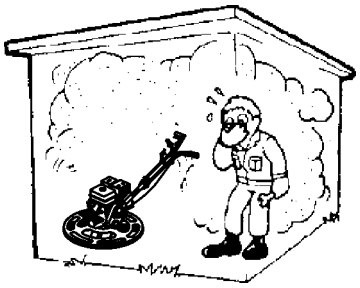

- **ALWAYS** refuel in a well-ventilated area, away from sparks and open flames.
- **ALWAYS** use extreme caution when working with **flammable** liquids. When refueling, **STOP** the engine and allow it to cool.
- **NEVER** operate the trowel in an explosive atmosphere where fumes are present, or near combustible materials. An explosion or fire could result in severe ***bodily harm or even death***.

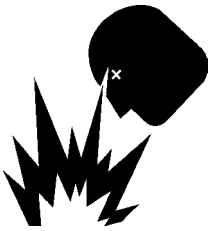

- **NEVER** ***smoke*** around or near the machine. Fire or explosion could result from ***fuel vapors***, or if fuel is spilled on a ***hot!*** engine.

- Topping-off to filler port is dangerous, as it tends to spill fuel.
- **NEVER** use fuel as a cleaning agent.

- **NEVER** Run engine without air filter. Severe engine damage may occur. Service air filter frequently to prevent carburetor malfunction.
- **NEVER** place your ***feet*** or ***hands*** inside the guard rings while starting or operating this equipment.
- **AVOID** wearing jewelry or loose fitting clothing that may snag on the controls or moving parts as this can cause a serious injury.
- **ALWAYS** keep clear of ***rotating*** or ***moving parts*** while operating the trowel.
- **Moving Parts** – Shut down the engine before performing service or maintenance functions. Contact with moving parts can cause serious injury.
- **ALWAYS** check to make sure that the operating area is clear before starting the engine.
- **NEVER** leave the machine ***unattended*** while running.
- **ALWAYS** be sure the operator is familiar with proper safety precautions and operations techniques before using trowel.
- **ALWAYS** keep the work area well organized.
- **ALWAYS** clear the work area of any debris, tools, etc. that would constitute a hazard while the trowel is in operation.

WARNING

ALWAYS check to make sure that the operating area is clear before starting the engine.

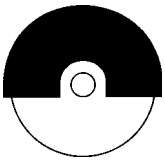

- No one other than the operator is to be in the working area when the saw is in operation.
- Always observe all applicable compulsory regulations relevant to environmental protection, especially, fuel storage, the handling of hazardous substances, and the wearing of protective clothing and equipment. Instruct the user as necessary, or, as the user, request this information and training.
- **ALWAYS** store equipment properly when it is not being used. Equipment should be stored in a clean, dry location out of the reach of children.

Transporting

- **ALWAYS** shutdown engine before transporting.
- Tighten fuel tank cap securely and close fuel cock to prevent fuel from spilling.
- Drain fuel when transporting trowel over long distances or bad roads.
- When placing the trowel inside a truck-bed for transport, always tie-down the trowel.
- **ALWAYS** use proper lifting techniques when moving the trowel.

Maintenance Safety

- **NEVER** lubricate components or attempt service on a running trowel.
- **ALWAYS** allow the trowel a proper amount of time to cool before servicing.
- Keep the trowel in proper running condition.
- Fix damage to the trowel immediately and always replace broken parts.
- Dispose of hazardous waste properly. Examples of potentially hazardous waste are used motor oil, fuel and fuel filters.
- **DO NOT** use food or plastic containers to dispose of hazardous waste.

Emergencies

- **ALWAYS** know the location of the nearest ***fire extinguisher.***

- **ALWAYS** know the location of the nearest and ***first aid kit.***

- In emergencies ***always*** know the location of the nearest phone or ***keep a phone on the job site***. Also know the phone numbers of the nearest ***ambulance***, ***doctor*** and ***fire department***. This information is invaluable in the case of an emergency and could keep a serious situation from becoming a tragic one .

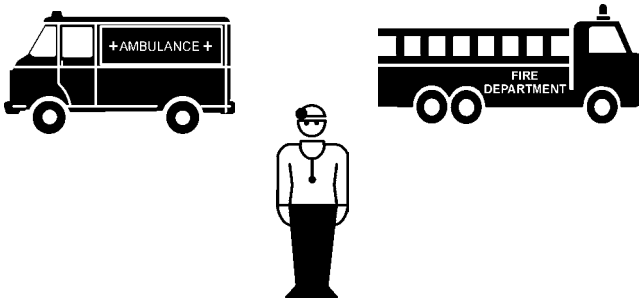

OPERATION AND SAFETY DECALS

The **CA4-4H** walk-behind trowel is equipped with a number of operation, safety and maintenance decals. Should any of these decals become unreadable, replacements can be obtained from your dealer.

P/N 1848

P/N 2942 WHITE TEXT 13”

P/N 20936

P/N 35137

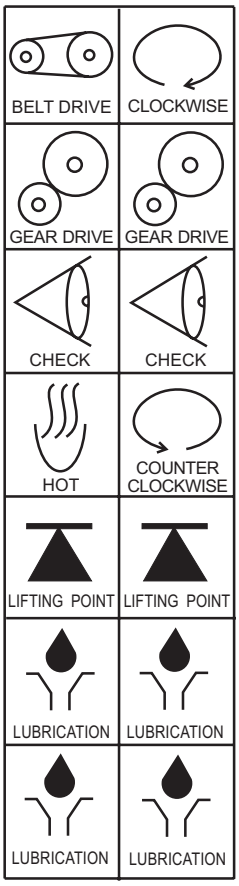

P/N: 11246

CONTACT
SERVICE
DEPARTMENT

P/N: 13118

P/N 11092

P/N 36099 (ISO Blue)

P/N: 21455

P/N 35168

P/N 20525

P/N 10732 (WHITE TEXT)

Intended Use

Operate the CA4-4H Trowel, tools and components in accordance with the manufacturer's instructions. Use of any other tools for stated operation is considered contrary to designated use. The risk of such use lies entirely with the user. The manufacturer cannot be held liable for damages as a result of misuse.

CA4-4H Trowel Familiarization

This walk-behind trowel is designed for the ***floating*** and ***finishing*** of concrete slabs.

Take a walk around the trowel. Take notice of all the major components (see Figure 2) like the engine, blades, Quick Pitch™ handle, clutch lever, etc. Check that there is always oil in the engine.

Read all the safety instructions carefully. Safety instructions will be found throughout this manual and on the trowel. Keep all safety information in good, readable condition. Operators should be well trained on the operation and maintenance of the trowel.

Before using your trowel, test it on a flat watered down section of finished concrete that is free of any debris and other objects.

This trial test run will increase your confidence in using the trowel and at the same time it will familiarize you with the trowel's controls. In addition you will understand how the trowel handles under actual conditions.

Engine

This trowel is available with a 2.9 kW (4 HP) ***HONDA*** gasoline engine. Refer to the engine owner's manual for instructions regarding the operation and maintenance of your engine. Please contact your nearest Multiquip Dealer for a replacement should the original manual disappear or otherwise become unusable.

Drive System

Power is transferred from the engine to the gearbox input shaft via a V-belt pulley drive system. The pulley engages using a manual clutch. See Parts section of this manual.

Gearbox

The ***gearbox*** is located beneath the engine and transfers power to the ***spider*** assembly. The gearbox controls the rotational speed of the trowel and is equipped with two shafts (input and output).

Spider

The vertical output shaft of the gearbox connects to a cast hub called the ***spider***. The spider has 4 arms that extend outward that are used for attachment of blades or other accessories. Remember as the gearbox output shaft rotates so does the spider assembly.

Guard Ring

This unit is equipped with a special rotating guard ring. It is designed to allow the operator to run the machine alongside walls, pipes, and obstructions without marring the surface.

Blades

The blades of the trowel finish the concrete as they are rotated around the surface. This trowel comes equipped with four ***combination*** (203mm / 8 in. wide) **blades** per rotor equally spaced in a radial pattern and attached to vertical rotating shaft by means of a ***spider assembly***.

Manual Clutch

In the event of a trowel runaway condition (operator releases the handle), a ***manual clutch*** will stop the engine and bring the trowel to a halt.

CAUTION

NEVER attempt to ***lift*** the trowel by yourself. **ALWAYS** get the assistance of another person to help lift the trowel .

Training

For proper training, please use the "**TRAINING CHECKLIST**" located in the front of this manual (Page 8). This checklist will provide an outline for an experienced operator to provide training to a new operator

Figure 2. Controls and Components

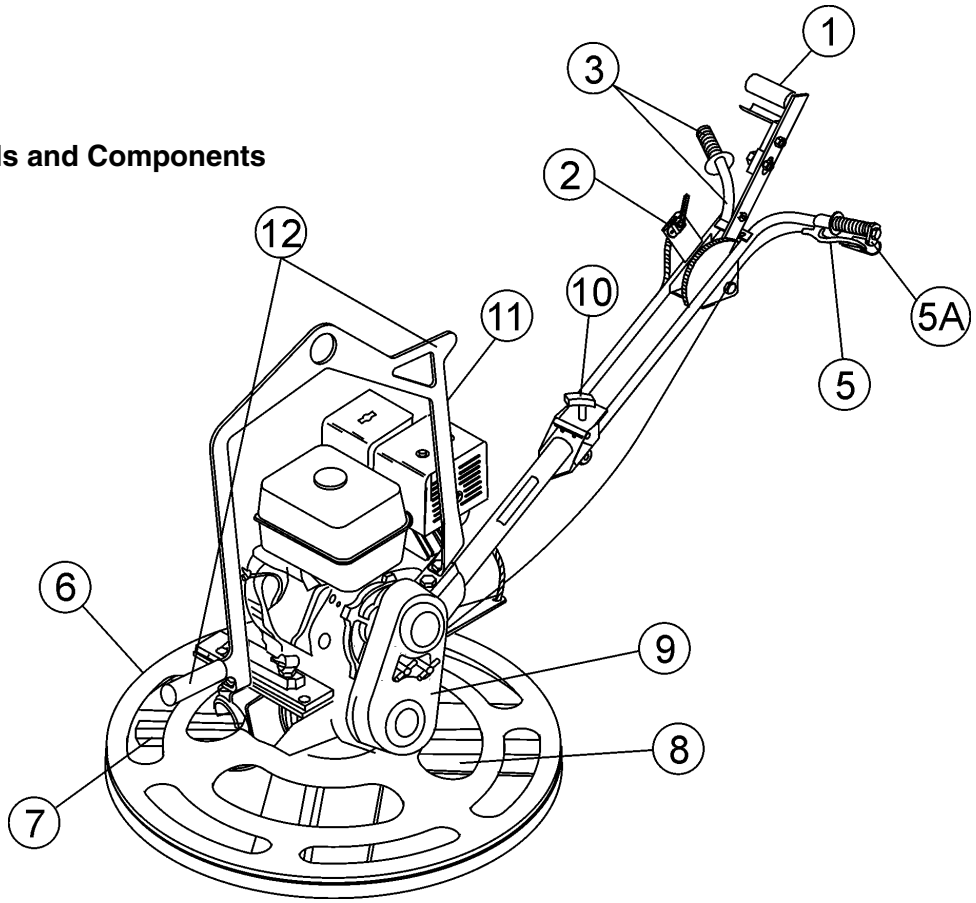

Figures 2 shows the location of the basic controls or components, for the ***CA4-4H TROWEL***. Listed below is a brief explanation of each control or component

1. **Quick Pitch™ Control Handle –** To adjust the pitch of the blades, grasp the handle then squeeze and either move the handle forward or backward to achieve the desired blade pitch.
2. **Throttle Control Lever –** Controls the speed of the engine. Move the hand lever towards the operator to increase engine speed (high), away from the operator to decrease engine speed (low).
3. **Hand Grip/Handle Bar –** When operating the trowel, place both hands on each grip to maneuver the trowel. Replace hand grips when they become worn or damaged.
4. **Engine** – This trowel uses a Honda GX120 gasoline engine.
5. **Clutch Lever** - Clutch engagement lever. When this lever is engaged, the blades will begin to rotate.

5A. **Clutch Lever Retainer**- Assists the operator in holding down the clutch lever.

6. **Rotating Guard Ring- NEVER** put hands or feet inside guard ring. **NEVER** attempt to llift trowel by the guard ring.
7. **Trowel Arm – NEVER** operate the trowel with a bent, broken or out of adjustment trowel arm. If the blades show uneven wear patterns or some blades wear out faster than others, the trowel arm may need to be replaced.
8. **Blades –** This trowel is equipped with special combination blades. Designed specifically for edging. In addition float discs can be attached to the trowel arms that will allow the trowel to float on "***wet***" concrete.
9. **V-Belt Cover –** Remove this cover to gain access to the V-belt. **NEVER** operate the trowel with this cover removed.
10. **T-Handle Release Knob –** Turn this handle counter-clockwise to release the upper handle and place in either down position or operate position. Turn handle clockwise to lock upper handle in place.
11. **Lifting Bale –** Trowel can be lifted and moved either by crane or by two people using the two handles on the bale.
12. **Lifting Handle –** For use when two people are lifting the trowel. Always make sure the folding handle is secure when lifting. Never attempt to life the trowel by the guard ring.

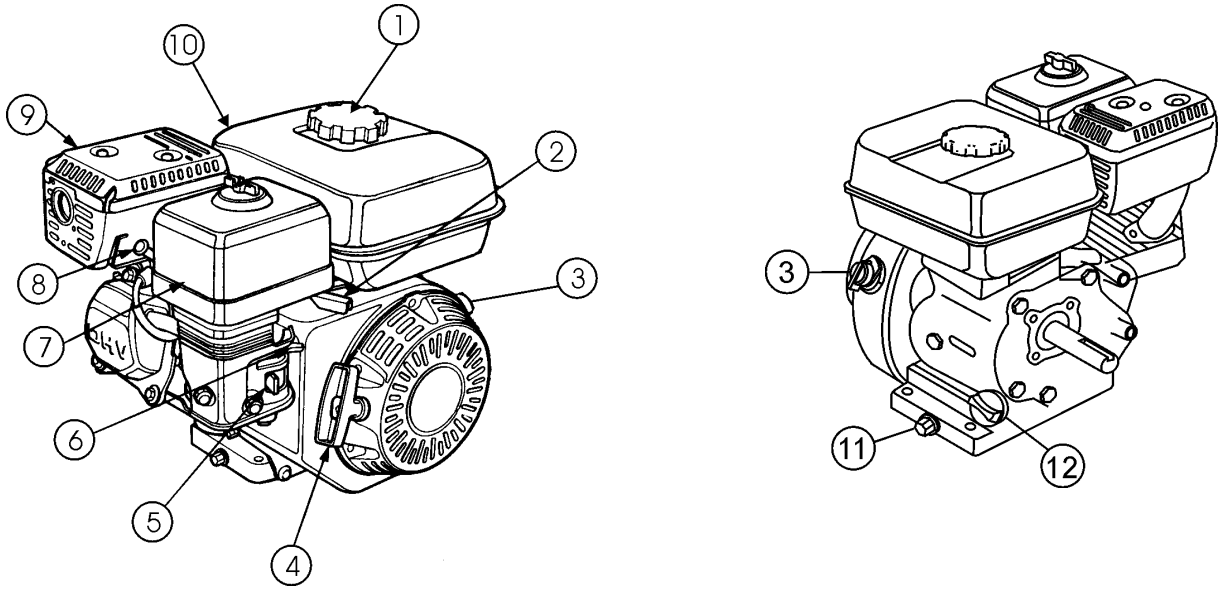

Figure 3. Honda GX120K1QX2 Engine Controls and Components

INITIAL SERVICING

The engine (Figure 3) must be checked for proper lubrication and filled with fuel prior to operation. Refer to the manufacturer's engine manual for instructions & details of operation and servicing. The engine shown above is a **HONDA** engine, operation for other types of engines may vary somewhat.

1. **Fuel Filler Cap –** Remove this cap to add unleaded gasoline to the fuel tank. Make sure cap is tightened securely. **DO NOT** over fill.

DANGER

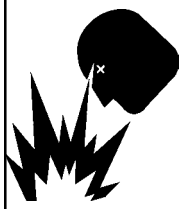

Adding fuel to the tank should be done only when the engine is stopped and has had an opportunity to cool down. In the event of a fuel spill, **DO NOT** attempt to start the engine until the fuel residue has been completely wiped up, and the area surrounding the engine is dry.

2. **Throttle Lever –** Used to adjust engine RPM speed (lever advanced forward ***SLOW***, lever back toward operator ***FAST***).
3. **Engine ON/OFF Switch –** ***ON*** position permits engine starting, ***OFF*** position stops engine operation.
4. **Recoil Starter (pull rope) –** Manual-starting method. Pull the starter grip until resistance is felt, then pull briskly and smoothly.
5. **Fuel Valve Lever – OPEN** to let fuel flow, **CLOSE** to stop the flow of fuel.
6. **Choke Lever –** Used in the starting of a cold engine, or in cold weather conditions. The choke enriches the fuel mixture.
7. **Air Cleaner –** Prevents dirt and other debris from entering the fuel system. Remove wing-nut on top of air filter cannister to gain access to filter element.

NOTE

Operating the engine without an air filter, with a damaged air filter, or a filter in need of replacement will allow dirt to enter the engine, causing rapid engine wear.

8. **Spark Plug –** Provides spark to the ignition system. Set spark plug gap according to engine manufacturer's instructions. Clean spark plug once a week.
9. **Muffler –** Used to reduce noise and emissions.
10. **Fuel Tank –** Holds unleaded gasoline. For additional information refer to engine owner's manual.
11. **Oil Drain Plug –** Remove this plug to remove oil from the engine's crankcase.
12. **Dipstick/Oil Filler Cap –** Remove this cap to determine if the engine oil is low. Add oil through this filler port as recommended in Table 3.

Quick Pitch™ Handle Assembly

The CA4-4H TROWEL is equipped with a folding upper handle (Figure 4). It was assembled at the factory and shipped in its folded or stow position. You will need to unfold and adjust the trowel handle to the upright position prior to operation.

NOTE

Considerable force may be required when moving the **Quick Pitch™ handle** forward or backward.

Unfolding the Trowel for Operation

1. Make sure that the **Quick Pitch™ *handle*** has been attached to the upper handle bar and the pitch control cable has slack. Remove the ***T-handle knob*** from the swing bolt on the top side of the upper handle bar, by rotating the knob counter-clockwise. Move the **Quick Pitch™ *handle*** toward's the operator's position and unfold the upper handle bar away from the engine into the ***upright*** position. Re-insert the swing bolt so that it fits through the slot in the hinge plate. Turn the T-handle knob counter-clockwise securely to hold upper handle bar in place.

CAUTION

DO NOT operate unless T-Handle Knob is securely in place.

2. When folding the handle assembly, remember to move the **Quick Pitch™ handle** forward first to avoid stretching the throttle cable.

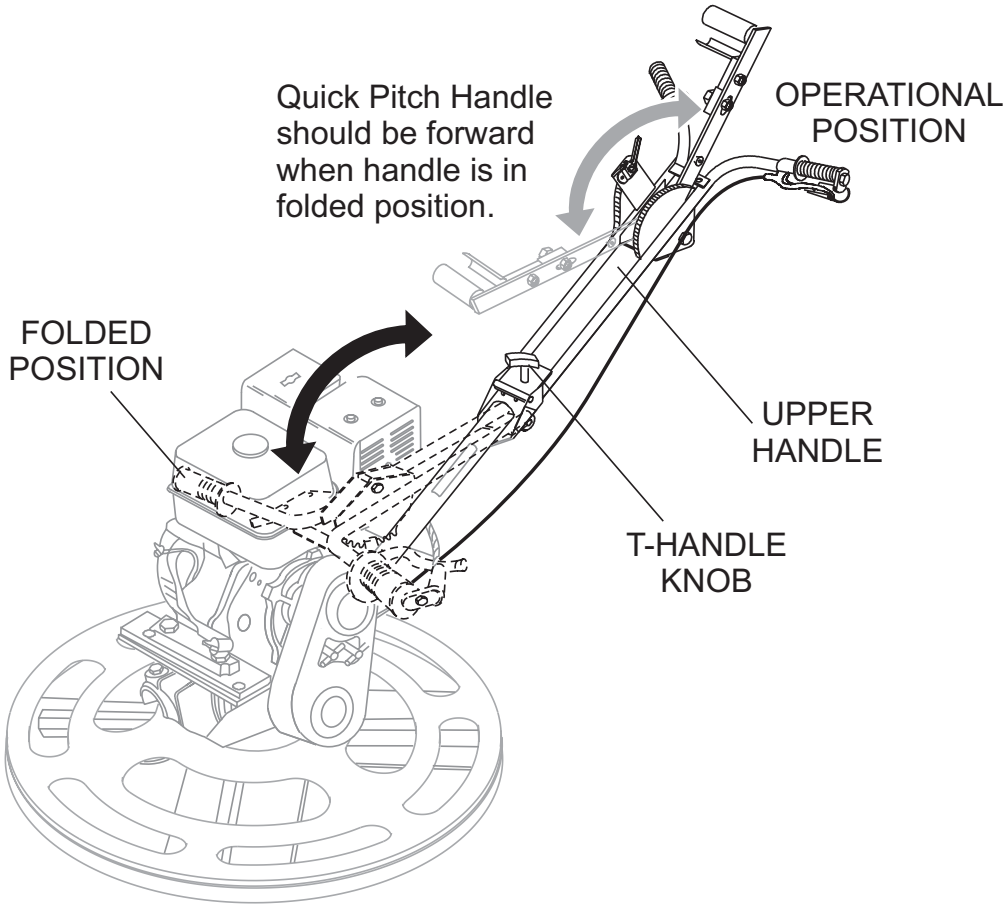

Figure 4. Trowel Folded and Operational Positions

CAUTION

ALWAYS wear approved eye and hearing protection before operating the trowel.

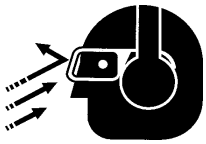

NEVER place hands or feet inside the guard rings while the engine is running. **ALWAYS** shut the engine down before performing any kind of maintenance service on the trowel.

Before Starting

1. Read safety instructions at the beginning of manual.
2. Clean the trowel, removing dirt and dust, particularly the engine cooling air inlet, carburetor and air cleaner.
3. Check the air filter for dirt and dust. If air filter is dirty, replace air filter with a new one as required.
4. Check carburetor for external dirt and dust. Clean with dry compressed air.
5. Check fastening nuts and bolts for tightness.

Engine Oil Check

1. To check the engine oil level, place the trowel on secure level ground with the engine stopped.
2. Remove the filler dipstick from the engine oil filler hole (Figure 5) and wipe clean.

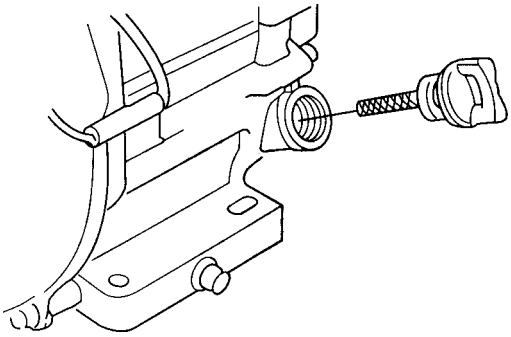

Figure 5. Engine Oil Dipstick (Removal)

3. Insert and remove the dipstick without screwing it into the filler neck. Check the oil level shown on the dipstick.
4. If the oil level is low (Figure 6), fill to the edge of the oil filler hole with the recommended oil type (Table 3). Maximum oil capacity is .45 liters (0.48 quarts).

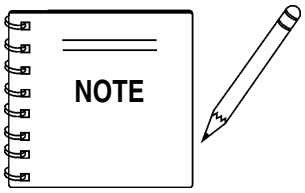

Reference manufacturer engine manual for specific servicing instructions.

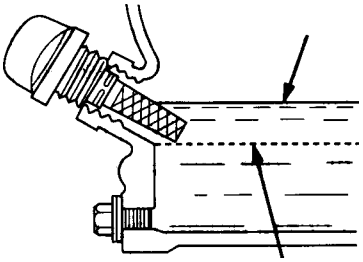

Figure 6. Engine Oil Dipstick (Oil Level)

Table 4. Oil Type

Season	Temperature	Oil Type
Summer	25°C or Higher	SAE 10W-30
Spring/Fall	25°C~10°C	SAE 10W-30/20
Winter	0°C or Lower	SAE 10W-10

DANGER

EXPLOSIVE FUEL!
Motor fuels are highly flammable and can be dangerous if mishandled. **DO NOT** smoke while refueling. **DO NOT** attempt to refuel the trowel if the engine is ***hot!*** or ***running***.

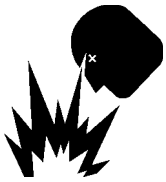

Fuel Check

1. Remove the gasoline cap located on top of fuel tank.
2. Visually inspect to see if fuel level is low. If fuel is low, replenish with unleaded fuel.
3. When refueling, be sure to use a strainer for filtration. **DO NOT** top-off fuel. Wipe up any spilled fuel.

Gearbox Oil

1. Determine if the ***gearbox*** oil is low by removing the oil plug located on the side of the gearbox. This plug will be marked by the "***check***" decal. See Figure 7. The correct level of the lubrication oil should be to the bottom of the fill plug.

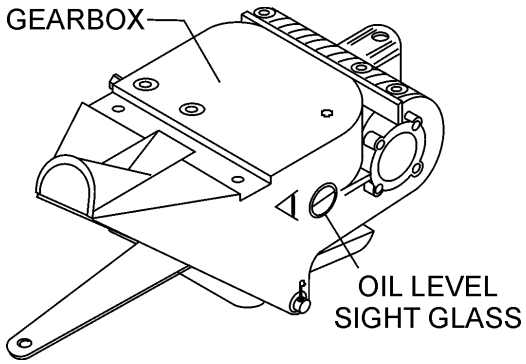

Figure 7. Gearbox

2. If lubrication oil begins to seep out as the drain plug is being removed, then it can be assumed that the gearbox has a sufficient amount of oil.
3. If lubrication oil does not seep out as the drain plug is being removed, fill with **type ISO 680 (P/N 10139)** gearbox lubricant oil until the oil filler hole overflows.

CAUTION

Disconnect the spark plug wire from the spark plug and secure away from the engine before performing maintenance or adjustments on the machine.

V-Belt Check

A worn or damaged V-belt can adversely affect the performance of the trowel. If a V-belt is defective or worn simply replace the V-belt as outlined in the maintenance section of this manual.

Belt Guard Check

Check for damage, loose or missing hardware.

Blade Check

Check for worn or damaged blades. Check to see if one blade is worn out while the others look new. If this is the case there could be a blade pitch problem. Refer to the maintenance section of this manual for blade pitch adjustment procedure. Replace any worn blades.

Hand Clutch

This finisher model is equipped with a ***hand operated clutch***. The unit automatically stops rotating when the clutch lever is released. Clutch operation should be tested each time the machine is started.

DO NOT let the machine sit unused with the engine at high speed for an extended period of time. It will cause premature belt wear or may destroy the belt. Always set the engine speed to idle when the hand clutch is disengaged.

WARNING

NEVER attempt to override the manual clutch by using tape or other means to hold down the clutch lever. Doing so may cause **SEVERE INJURY.**

This section is intended to assist the operator with the initial start-up of the walk-behind trowel. It is extremely important that this section be read carefully before attempting to use the trowel in the field.

DO NOT use your trowel until this section is thoroughly understood

Lifting the Trowel Onto a Slab

Extra care should be taken when lifting the trowel off the ground. Serious damage to the machine or personal injury could be caused by dropping a trowel.

WARNING

NEVER attempt to lift this machine alone. **NEVER** lift the trowel by the guard ring as it may rotate and cause injry.

ALWAYS make certain the folding handle is secure and use only the manufaturer's approved lifting points. The trowel may be lifted at the center lifting bale by crane or other lifting device of adequate capacity.

CAUTION

DO NOT attempt to operate the trowel until the Safety, General Information and Inspection sections of this manual have been read and thoroughly understood.

Starting the Engine

1. Place the engine ***fuel valve lever*** (Figure 8) to the "**ON**" position.

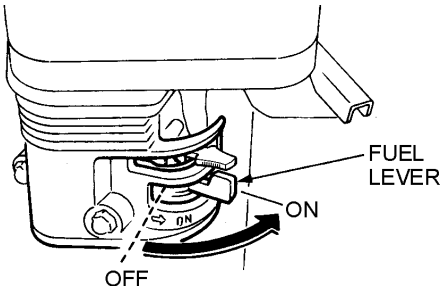

Figure 8. Engine Fuel Valve Lever

2. Place the trowel's ***throttle lever*** (Figure 9) to the "**IDLE**" position.

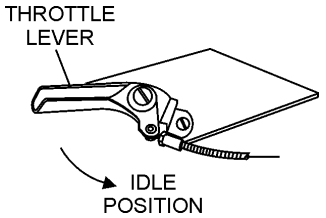

Figure 9. Throttle Lever (Idle Position)

3. Place the ***choke lever*** (Figure 10) in the "***CLOSED***" position if starting a ***cold*** engine.

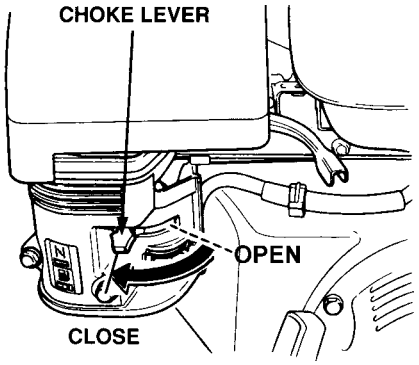

Figure 10. Engine Choke Lever

4. Place the ***choke lever*** (Figure 11) in the "***OPEN***" position if starting a ***warm engine*** or the ***temperature is warm.***

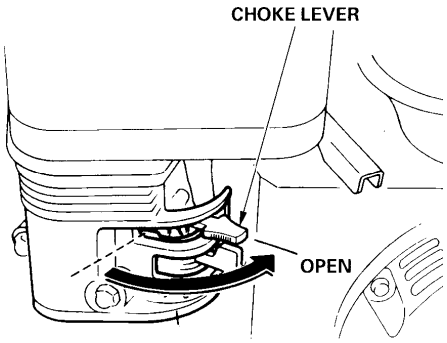

Figure 11. Engine Choke Lever (Open)

5. Place the ***engine ON/OFF switch*** (Figure 12) in the "***ON***" position.

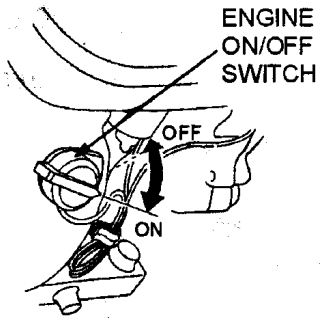

Figure 12. Engine ON/OFF Switch

6. Grasp the starter grip (Figure 13) and slowly pull it out. The resistance becomes the hardest at a certain position, corresponding to the compression point. Pull the starter grip briskly and smoothly for starting.

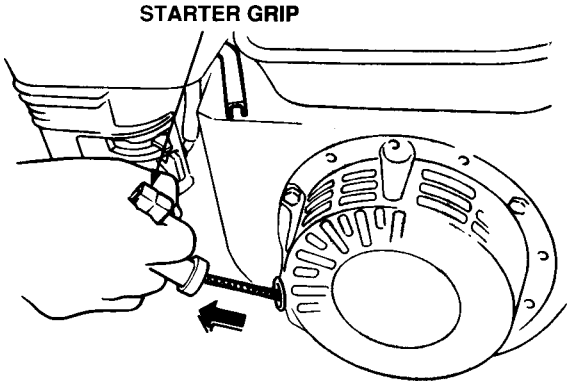

Figure 13. Starter Grip

7. If the engine has started, slowly return the choke lever (Figure 11) to the ***OPEN*** position. If the engine has not started repeat steps 1 through 6.

8. Before the trowel is placed into operation, run the engine for several minutes. Check for fuel leaks, and noises that would associate with a loose V-belt cover or component.

9. To begin troweling, move the throttle lever (Figure 14) toward the "***FAST***" position.

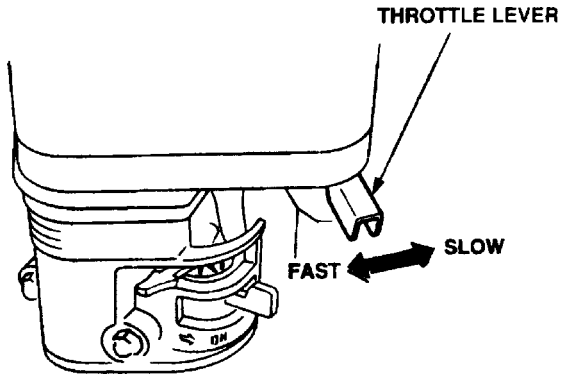

Figure 14. Throttle Lever (Run Position)

Stopping The Engine

1. Move the throttle lever to the **IDLE** or **SLOW** position (Figure 14) and run the engine for three minutes at low speed.

2. After the engine ***cools***, turn the engine start/stop switch to the "**OFF**" position (Figure 15).

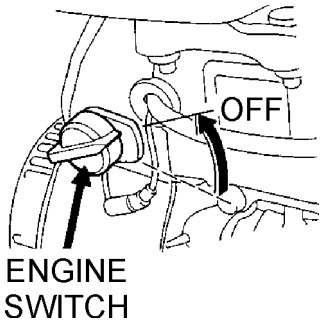

Figure 15. Engine ON/OFF Switch (OFF Position)

3. Close the ***fuel shut-off valve*** (Figure 16) by moving the fuel valve lever to the **OFF** position.

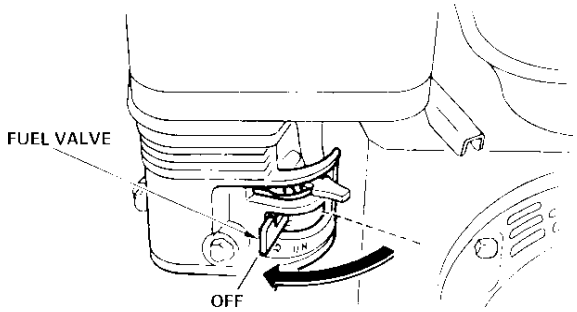

Figure 16. Fuel Valve Lever (OFF Position)

The following steps are intended as a basic guide to machine operation, and are not to be considered a complete guide to concrete finishing. We suggest that all operators (experienced and novice) read "***Slabs on Grade***" published by the ***American Concrete Institute, Detroit, Michigan***. Read the "Training" section of this manual for more information.

Pitching The Blades - Quick Pitch Handle

1. To pitch the blades upwards using the ***"Quick Pitch™" handle***, (Figure 17) simply squeeze the trigger lock and pull the handle towards the operator. Pushing the handle towards the engine will cause the blades to lay flat.

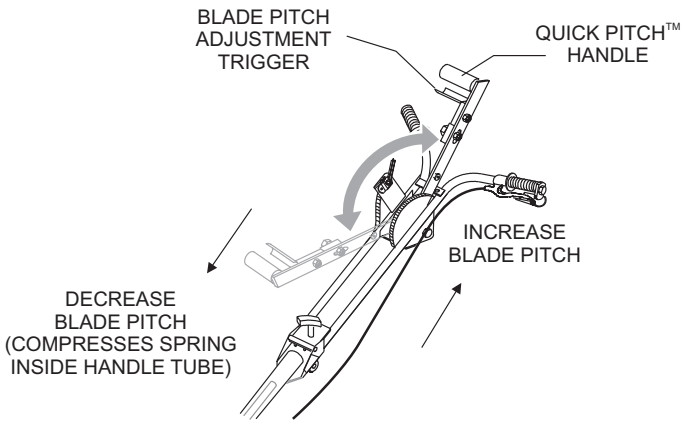

Figure 17. Quick Pitch™ Handle

Maneuvering the Trowel

1. Get into the operator's position behind the handle. With a secure foothold and a firm grasp on the handles slowly increase the engine speed until the desired blade speed is obtained.

   Set engine speed with the throttle, then pull on the hand clutch lever to start the blades turning. Adjust the blade speed after the hand clutch is fully engaged.

2. To maneuver the trowel, gently lift up on or press down on the main trowel handle. To move the machine to the operator's left, ***lift up*** on the handle, to move machine to the right, ***push down*** on the handle.

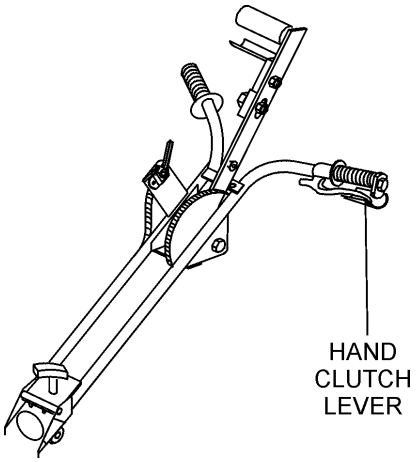

Figure 18. Hand Clutch Lever

3. The best method for finishing concrete is to slowly walk backwards (Figure 19) with the trowel, guiding the trowel from side to side. This will cover all footprints on wet concrete.

4. Remember that if you let go of the trowel, just step away and let the trowel come to a complete stop before trying to recover the trowel.

5. Check the manual clutch occasionally for proper operation. Checking operation of the manual clutch at the beginning of operation and periodically serves as a safety check verification.

Figure 19 below illustrates a typical walk-behind trowel application. Practice maneuvering the trowel. The trick is to let the trowel do the work.

Continue to practice maneuvering the trowel. Try to practice as if you were finishing a slab of concrete. Practice edging and covering a large area. Remember a good finishing technique is to work backwards. Be careful when moving backwards so that hazards can be avoided. The best way to get accustomed to the trowel is repeated use.

To move the trowel to the operator's left, ***lift up*** on the handle, to move the trowel to the right ***push down*** on the handle.

Remember! that if you let go of the trowel, just ***step away*** and let the trowel come to a complete **STOP** before trying to recover the trowel.

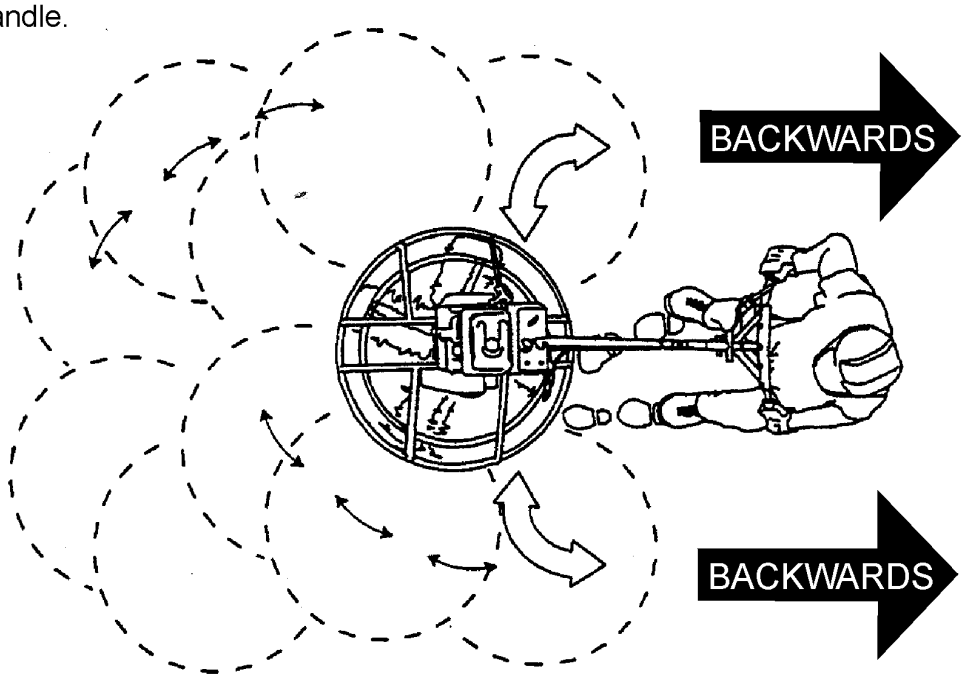

The best method for finishing concrete is to slowly walk ***backwards*** with the trowel, guiding the trowel from side to side. This will cover all footprints on wet concrete.

Figure 19. Maneuvering The Trowel

CAUTION

NEVER place your ***feet*** or ***hands*** inside the guard rings while starting or operating this equipment.

CAUTION

ALWAYS keep clear of ***rotating*** or ***moving*** parts while operating this equipment.

Blades

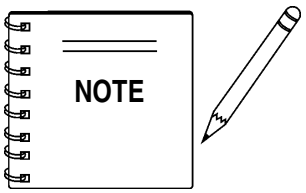

Blades should be changed when they fail to finish concrete in a satisfactory manner.

Blades are a vital part of finishing concrete. This finisher has been designed to finish concrete and is built to stringent quality standards out of the finest trowel steel. If you need replacement blades, consult your parts list in this manual for part numbers and order them from your Multiquip parts dealer or importer.

Combo Blades

This trowel was equipped with ***combination type*** (Figure 20) blades as original equipment. These blades have been designed for optimum performance in both the floating and finishing of concrete. These blades are versatile and should take care of most troweling needs.

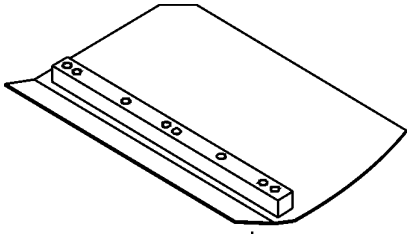

Figure 20. Combination Blade

Optional Float Discs (Pans)

These round discs (Figure 21) attach to the spiders and allow the machine to "***float***" on "***wet***" concrete. The disc design allows early floating and easy movement from wet to dry areas. They are also very effective in embedding large aggregates and surface hardeners.

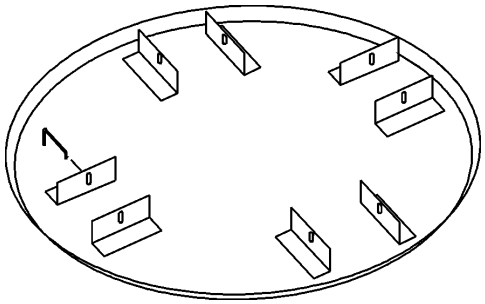

Figure 21. Float Disk (Pan)

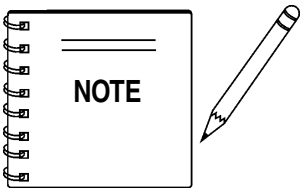

See the engine manual supplied with your machine for appropriate engine maintenance schedule and troubleshooting guide for problems.

At the front of the book (Page 9) there is a "***Daily Pre-Operation Checklist***". Make copies of this checklist and use it on a daily basis.

CAUTION

ALWAYS allow the engine to cool before servicing. **NEVER** attempt any maintenance work on a ***hot!*** engine.

CAUTION

Disconnect the spark plug wire from the spark plug and secure away from the engine before performing maintenance or adjustments on the machine.

MAINTENANCE SCHEDULE

Daily (8-10 Hours)

1. Check the oil level in the engine crankcase and gear box, fill as necessary.
2. Check V-belt.

Weekly (50-60 Hours)

1. Relube arms, thrust collar and clutch
2. Replace blades if necessary.
3. Check and clean or replace the engine air filter as necessary.
4. Replace engine oil and filter as necessary, see engine manual.

Monthly (200-300 Hours)

1. Remove, clean, reinstall and relube the arms and thrust collar. Adjust the blade arms.
2. Remove, clean, reinstall clutch.

Yearly (2000-2500 Hours)

1. Check and replace if necessary the arm bushings, thrust collar bushings and shaft seals.
2. Check pitch control cables for wear.
3. Adjust blade speed.

Trowel Arm Adjustment Procedure

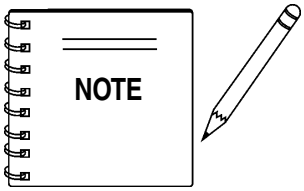

The following procedure should be followed to adjust trowel arms when it becomes apparent that the trowel is finishing poorly or in need of routine maintenance.

A ***level***, clean area to test the trowel prior to and after is essential. Any unlevel ***spots*** in the floor or debris under the trowel blades will give an incorrect perception of adjustment. Ideally, a 127mm x 127mm (5 in. x 5 in.), 19 mm (0.75 in.) thick ***flat*** steel plate should be used for testing.

1. To determine which blades need adjustment, place the trowel in the test area (19 mm [0.75 in.] thick plate) and look for the following conditions:
   - Pitch the blades as flat as possible and look at the ***adjustment bolts***. They should all just make contact with the ***lower wear plate*** on the spider. If you can see that one of them is not making contact, some adjustment will be necessary.
   - Is the machine wearing out blades unevenly (i.e. one blade is completely worn out while the others look new)?

Figure 22 below illustrates "***worn spider or bent trowel arms***". Check to see that adjustment bolt is barely touching (0.10" max. clearance) lower wear plate. All alignment bolts should be spaced the same distance from the lower wear plate.

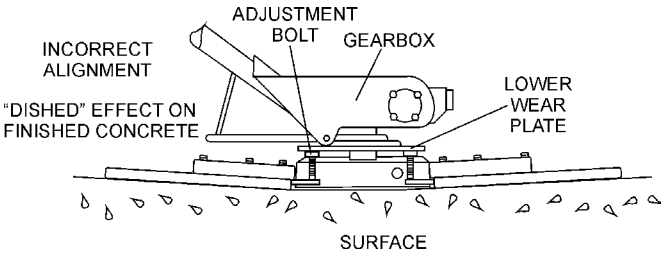

Figure 22 Worn Spider Plate

Figure 23 below illustrates the "***correct alignment***" for a spider plate (as shipped from the factory).

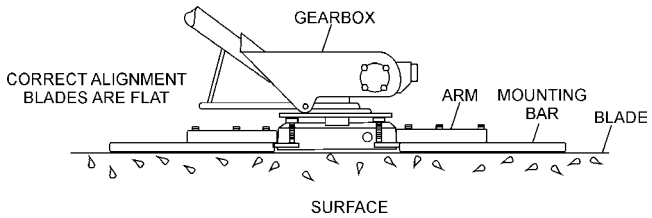

Figure 23. Correct Spider Plate Alignment

2. Start engine, and bring trowel blades up to full speed and look for the following conditions:
   - Does the trowel have a perceived rolling or bouncing motion when in use?
   - Look at the trowel while it is running, does the guard ring "rock up and down" relative to the ground?

Spider Removal

1. Once it is determined that an adjustment is required, remove the spider assembly from the gearbox shaft as follows:
   a. Remove the zerk fitting and allen head screw designated by the letter "**S**" (Figure 24). In addition, on the opposite side of the spider block there is another zerk fitting and allen head screw, remove both of these components.

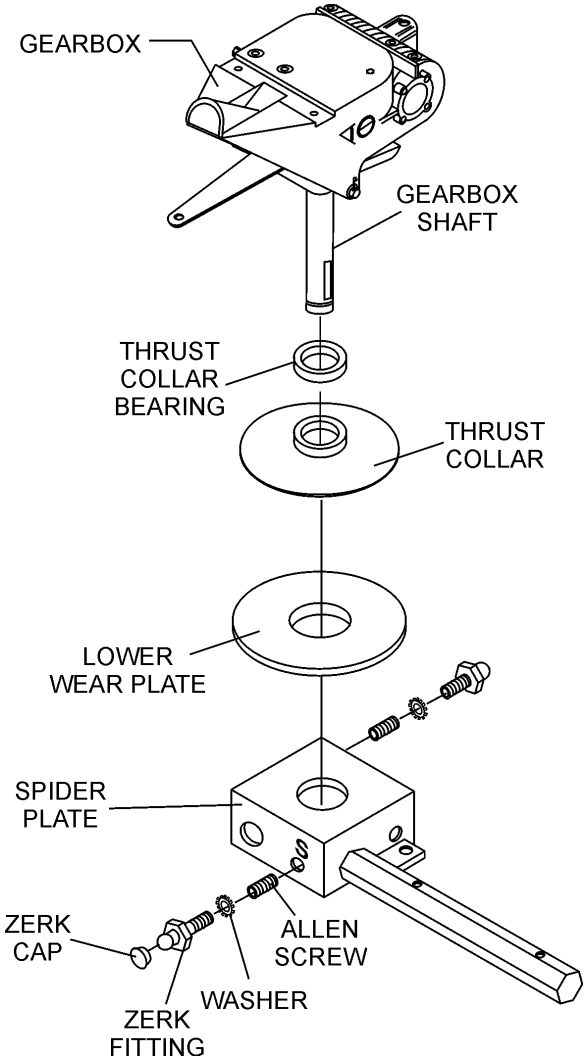

Figure 24. Spider/Gearbox Removal

   b. Lift the upper trowel assembly off the spider assembly. A slight tap with a rubber mallet may be necessary to dislodge the spider from the main shaft of the gearbox.

Trowel Arm Removal

1. Remove the two remaining zerk fittings and allen head screws from the spider assembly (Figure 25).

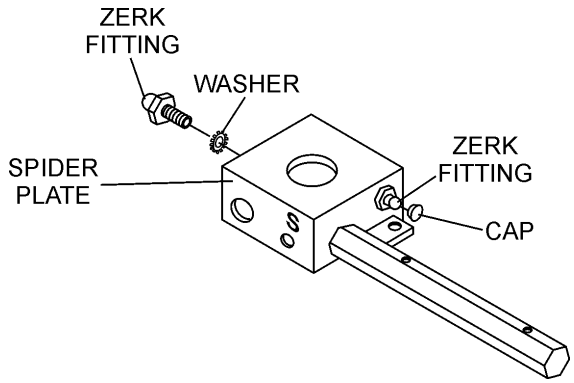

Figure 25. Trowel Arms Removal

Trowel Blade Removal

CAUTION

Disconnect the spark plug wire from the spark plug and secure away from the engine before performing maintenance or adjustments on the machine.

1. Remove the trowel blades from the trowel arm by removing the two hex head bolts (Figure 26) from the trowel arm. Set blades aside.

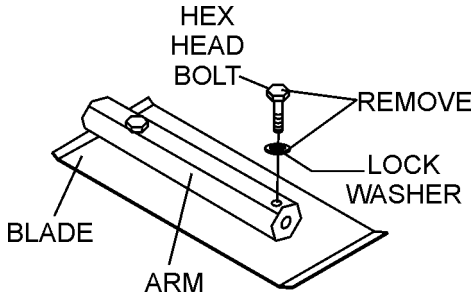

Figure 26. Trowel Blades

2. ***Wire brush*** any build-up of concrete from all six sides of the trowel arm. Repeat this for the remaining three arms.

Trowel Arm Flatness Test

1. Using a piece of 19 mm (3/4 in.) thick steel plate or any surface which is ***true*** and ***flat***, check all ***six sides*** of each trowel arm for flatness.

2. Check each of the six sides of the trowel arm (hex section only) using a ten thousands of an inch (max.) feeler gauge (Figure 27) between the flat of the trowel arm and an ***extremely flat*** test surface.

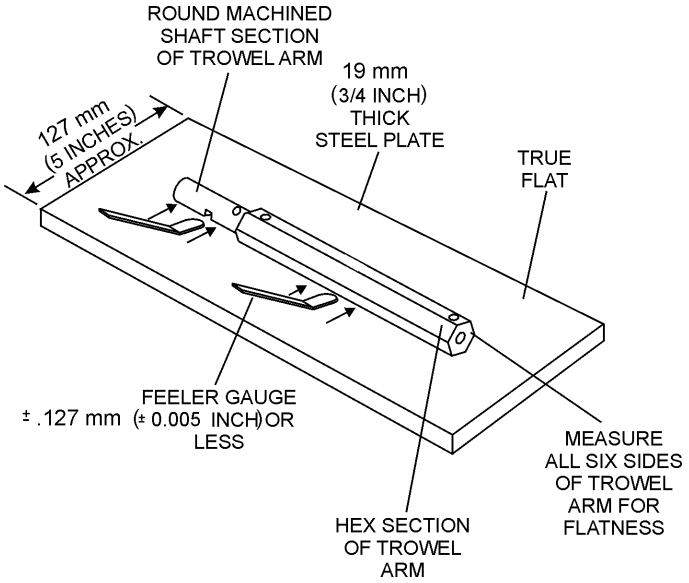

Figure 27. Trowel Arm Flatness Test

3. If the trowel arm is found to be ***uneven*** or ***bent***, replace the trowel arm. A bent trowel will not allow the trowel to operate in a smooth fluid rotation.

4. Next, check each of the six sides of the round machined shaft section of the trowel arm. Each section should have the ***same clearance*** between the round of the trowel arm shaft and the test surface.

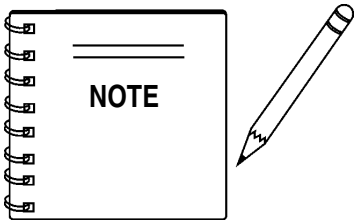

Trowel arms can be damaged by rough handling or by striking exposed plumbing or forms while in operation. ***ALWAYS*** look-out for objects which might cause damage to the trowel arms.

Re-Assembly

1. Clean and examine the ***lower wear plate***, ***thrust collar*** and ***thrust collar bushing***. Examine the entire spider assembly. Wire brush any concrete or rust build-up. If any of the spider components are found to be damaged or out of round, replace them.

2. Insert all trowel arms (4) into spider plate.

3. Lock trowel arms in place by tightening the hex head zerk grease fittings (4) and allen head screws (2).

4. Re-install the blades back onto the trowel arms.

5. Reinstall **lower wear plate**, ***thrust collar*** and ***thrust collar bearing*** in the ***reverse order*** that they were dis-assembled onto the spider shaft. Make sure that there is little or no lateral movement between the thrust collar and the spider shaft.

6. Carefully lift *the* ***upper trowel assembly***, line up the key-way on gear box main shaft and insert into spider assembly.

7. Lubricate all grease points (zerk fittings) with premium "***Lithum 12"*** based grease, conforming to NLG1 Grade #2 consistency.

Changing a Blade

We recommend that ***all the blades be changed at the same time***. The machine may wobble or bounce if only some of the blades are changed at one time.

1. Place the machine on a flat, level surface. Adjust the blade pitch control to make the blades as flat as possible. Note the blade orientation on the trowel arm.

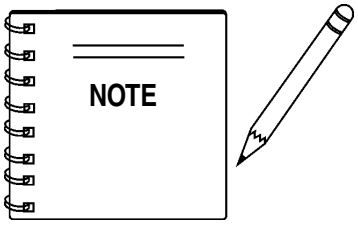

Before removing the blades, please note the orientation of the blade on the trowel arm.

1. Remove the two bolts and lock washers that secure the blade to the trowel arm. Remove the blade.
2. Using a wire brush, scrape all concrete particles and foreign debris from the trowel arm.
3. Install the new trowel blade onto the trowel arm. Make sure blade is installed correctly, maintaining the proper orientation for direction of rotation.
4. Reinstall the two bolts and lock washers that secure the blade to the trowel arm. Tighten both bolts securely.
5. Repeat steps 1 - 4 for all remaining blades.

Hand Clutch Adjustment

This trowel is equipped with a hand-operated clutch that is a belt-tightener type clutch. It operates by removing ***slack*** in the V-belt which then transmits power from the engine to the gearbox.

There are two reasons to adjust the hand clutch: 1) operator comfort; 2) initial belt stretch and break-in.

The easiest and most simple adjustment is to adjust the clutch cable housing using the adjustment nut (Figure 28) located on the clutch lever. Rotating the nut provides either more or less (depending upon the direction of rotation) clutch engagement.

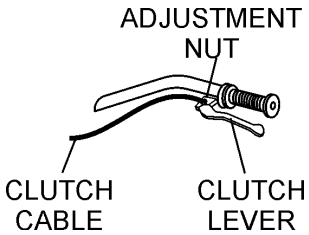

Figure 28. Trowel Arm Adjustment Tool

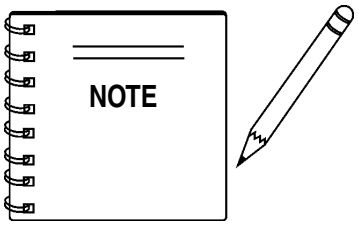

Check the manual clutch occasionally for proper operation. Checking operation of the manual clutch at the beginning of operation and periodically serves as a safety check verification.

Hand Clutch Disengagement

1. Start the trowel as outlined in the "***Initial Start-up***" section in this manual. Move the throttle lever so that the engine is running about 1/4 to 1/3 of full speed.
2. Grip the trowel handle firmly and carefully engage the clutch by squeezing the clutch lever toward the handle with your left hand. After the trowel is stabilized and you feel comfortable with its operation, use your right hand to adjust the housing adjustment nut.
3. Rotating the nut so that it backs out of the lever housing increases the engagement and also the squeezing force required to keep it engaged.

   Too much squeezing force may cause premature hand fatigue. Too little squeezing force may cause belt slippage and premature belt wear. Each operator should experiment with the adjustment to get the optimum combination of squeeze force and belt grip.
4. After initial break-in (approximately 8 hours) the above procedure should be repeated to attain optimum operator comfort and belt wear.
5. After considerable belt wear, the adjustments mentioned above may have a little or no effect on clutch engagement. If this is the case, the belt should be replaced.

⚠ WARNING

NEVER attempt to override the manual clutch by using tape or other means to hold down the clutch lever. Doing so may cause **SEVERE INJURY.**

TABLE 5. TROUBLESHOOTING

SYMPTOM	POSSIBLE PROBLEM	SOLUTION
Engine running rough or not at all.	Engine ON/OFF Switch in "OFF" position or malfunctioning?	Make sure that the Engine ON/OFF Switch is ON or replace switch if necessary.
	Fuel?	Look at the fuel system. Make sure there is fuel being supplied to the engine. Check to ensure that the fuel filter is not clogged.
	Ignition?	Check to ensure that the ignition switch has power and is functioning correctly.
	Loose wire connections?	Check wiring. Replace or repair as necessary.
	Bad contacts in ON/OFF switch?	Replace ON/OFF switch.
If trowel “bounces, rolls concrete, or makes uneven swirls in concrete”.	Blades?	Make certain blades are in good condition, not excessively worn. Finish blades should measure no less than 2" (50mm) from the blade bar to the trailing edge, combo blades should measure no less that 3.5" (89mm). Trailing edge of blade should be straight and parallel to the blade bar.
	Pitch adjustment?	Check that all blades are set at the same pitch angle as measured at the spider. A field adjustment tool is available for height adjustment of the trowel arms. (Contact Parts Dept.)
	Bent trowel arms?	Check the spider assembly for bent trowel arms. If one of the arms is even slightly bent, replace it immediately.
	Spider?	Check fit of arms in spider. This can be done by moving the trowel arms up and down. If there is more than 1/8" (3.2 mm) of travel at the tip of the arm, the spider and arms should be replaced.
	Thrust collar?	Check the flatness of the thrust collar by rotating it on the spider. If it varies by more than 0.02" (0.5 mm) replace the thrust collar.
	Thrust collar?	Check the thrust collar by rocking it on the spider. If it can tilt more than 3/32" (2.4 mm) [as measured at the thrust collar O.D.], replace the thrust collar.
	Thrust bearing worn?	Check the thrust bearing to see that it is spinning free. Replace if necessary.
Machine has a perceptible rolling motion while running.	Main shaft?	The main output shaft of the gearbox assembly should be checked for straightness. The main shaft must run straight and cannot be more than 0.003" (0.08 mm) out of round at the spider attachment point.
	Yoke?	Check to make sure that both fingers of the yoke press evenly on the wear cap. Replace yoke as necessary.
	Blade Pitch?	Check to ensure that each blade is adjusted to have the same pitch as all other blades. Adjust per maintenance section in manual.

TABLE 5. TROUBLESHOOTING (CONTINUED)		
SYMPTOM	**POSSIBLE PROBLEM**	**SOLUTION**
Clutch slipping or sluggish response to engine speed change.	Worn V-belts?	Replace V-belt.
	Hand clutch out of adjustment?	Adjust per instructions in maintenance section of this manual.
	Worn or defective hand clutch parts?	Replace parts as necessary.
	Worn bearings in gearbox?	Rotate input shaft by hand. If shaft rotates with difficulty, check the input and output shaft bearings. Replace as necessary.
	Worn or broken gears in gearbox?	Verify that the gearbox shaft rotates when the input shaft is rotated. Replace both the worm and worm gear as a set.

TABLE 6. TROUBLESHOOTING (ENGINE)

SYMPTOM	POSSIBLE CAUSE	SOLUTION
Difficult to start, "fuel is available, but no SPARK at spark plug".	Spark plug bridging?	Check gap, insulation or replace spark plug.
	Carbon deposit on spark plug?	Clean or replace spark plug.
	Short circuit due to deficient spark plug insulation?	Check spark plug insulation, replace if worn.
	Improper spark plug gap?	Set to proper gap.
Difficult to start, "fuel is available, and SPARK is present at the spark plug".	ON/OFF switch is shorted?	Check switch wiring, replace switch.
	Ignition coil defective?	Replace ignition coil.
	Improper spark gap, points dirty?	Set correct spark gap and clean points.
	Condenser insulation worn or short circuiting?	Replace condenser.
	Spark plug wire broken or short circuiting?	Replace defective spark plug wiring.
Difficult to start, "fuel is available, spark is present and compression is normal".	Wrong fuel type?	Flush fuel system, and replace with correct type of fuel.
	Water or dust in fuel system?	Flush fuel system.
	Air cleaner dirty?	Clean or replace air cleaner.
	Choke Open? (Engine cold)	Close Choke.
	Choke Closed? (Engine warm)	Open Choke.
Difficult to start, "fuel is available, spark is present and compression is low".	Suction/exhaust valve stuck or protruded?	Re-seat valves.
	Piston ring and/or cylinder worn?	Replace piston rings and or piston.
	Cylinder head and/or spark plug not tightened properly?	Torque cylinder head bolts and spark plug.
	Head gasket and/or spark plug gasket damaged?	Replace head and spark plug gaskets.
No fuel present inside priming bulb.	Fuel not available in fuel tank?	Fill with correct type of fuel.
	Fuel filter clogged?	Replace fuel filter.
	Fuel tank cap breather hole clogged?	Clean or replace fuel tank cap.
	Air in fuel line?	Bleed fuel line.

NOTE PAGE

CA4-4H TROWEL — EXPLANATION OF CODES IN REMARKS COLUMN

How to read the marks and remarks used in this parts book.

Section 1: Items Found In the "Remarks" Column

Serial Numbers-Where indicated, this indicates a serial number range (inclusive) where a particular part is used.

Model Number-Where indicated, this shows that the corresponding part is utilized only with this specific model number or model number variant.

Items Found In the "Items Number" Column

All parts with same symbol in the number column, *, #, +, %, or >, belong to the same assembly or kit.

Note: If more than one of the same reference number is listed, the last one listed indicates newest (or latest) part available.

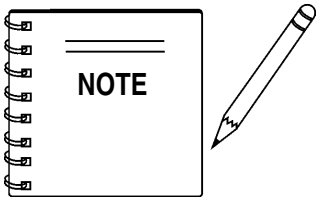

The contents of this parts catalog are subject to change without notice.

CA4-4H TROWEL 1 TO 3 UNITS WITH HONDA GX120K1QX2 GASOLINE ENGINE.

1 to 3 Units

Qty.	P/N	Description
3	0189	GRIP
1	21046	GASKET KIT
1	21047	BEARING KIT
2	9807354776	SPARK PLUG HONDA
2	17631ZH7003	TANK CAP (HONDA)
3	17211896000	AIR CLEANER ELEMENT (HONDA)
2	17218ZE2505	FILTER OUTER (HONDA)
1	1714	PITCH CABLE
1	10607	THRUST BEARING
1	10567	THRUST COLLAR
1	10639	WEAR PLATE
3	10611	V-BELT (A-21)
1	0302	CABLE, THROTTLE
1	10653	CLUTCH CABLE ASSY.
2	10139	GEARBOX LUBRICANT
1	10936	CABLE ASSY. HAND CLUTCH

NAMEPLATE AND DECALS

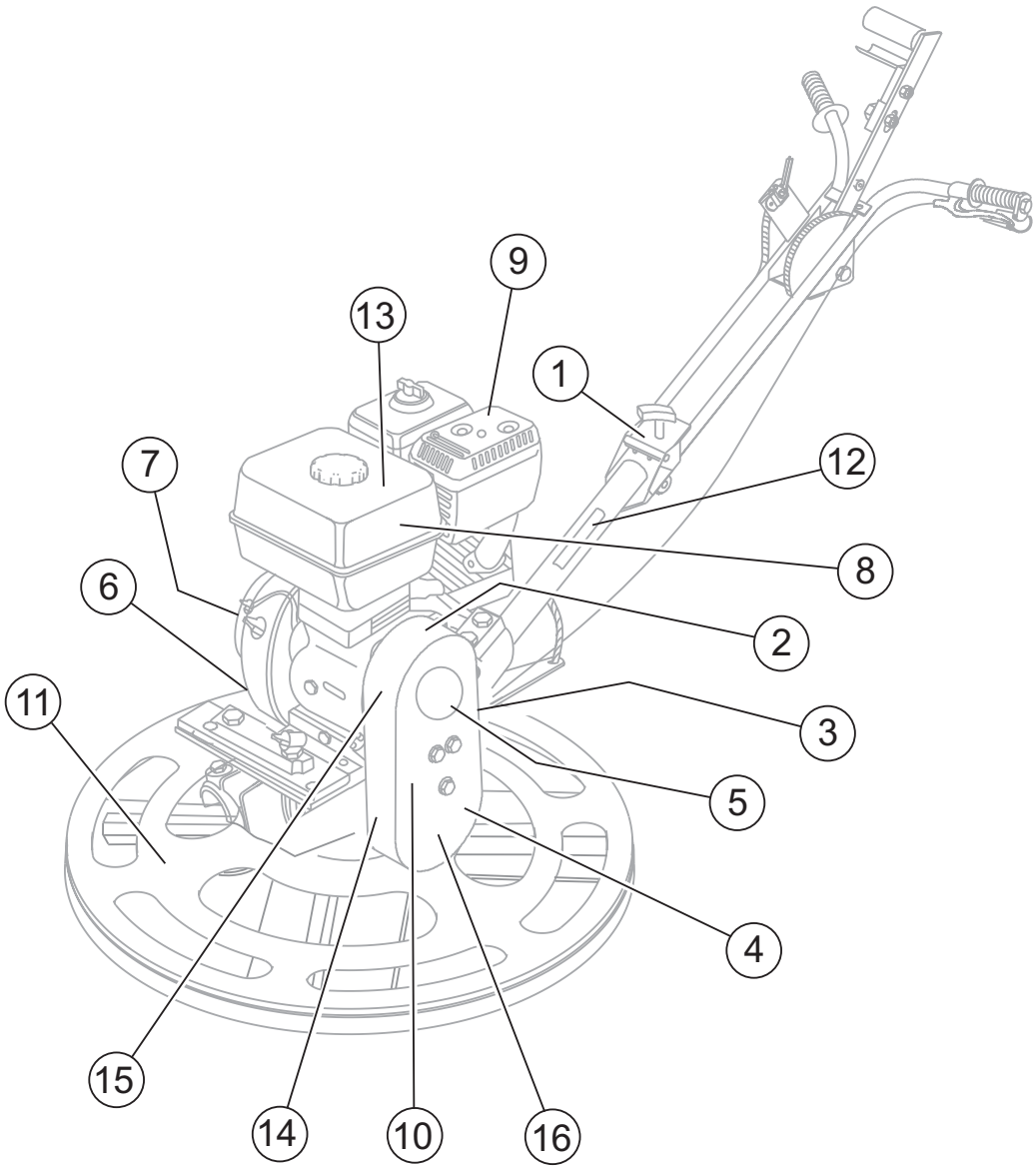

NAMEPLATE AND DECALS

NO.	PART NO.	PART NAME	QTY.	REMARKS
1	10732	DECAL: CAUTION PITCH HANDLE	1	SAFETY ITEM
2	11246	DECAL: BELT DRIVE	1	SAFETY ITEM
3	11246	DECAL: GEAR DRIVE	1	SAFETY ITEM
4	11246	DECAL: COUNTER CLOCKWISE	1	SAFETY ITEM
5	1848	DECAL: MQ/WHITEMAN POWER TROWEL	1	
6	11246	DECAL: CHECK OIL	1	
7		NAME PLATE	1	CONTACT MULTIQUIP PARTS DEPARTMENT
8	36099	DECAL: HELMET, SHOE AND GLOVE	1	SAFETY ITEM
9	11246	DECAL: HEAT	1	SAFETY ITEM
10	20525	DECAL: WARNING, CA PROP 65	1	SAFETY ITEM
11	20936	DECAL: MQ MULTIQUIP	3	
12	2942	DECAL: MQ WHITEMAN (WHITE TEXT)	1	
13	35137	DECAL: WARNING, READ MANUAL	1	SAFETY ITEM
14	35168	DECAL: WARNING, BLADE RISK	1	SAFETY ITEM
15	11092	DECAL: CE	1	
16	21455	DECAL: WARNING, LIFT/CRUSH HAZARD	1	SAFETY ITEM

SEE DECAL ILLUSTRATIONS ON PAGE 12

QUICK PITCH ™ HANDLE ASSY.

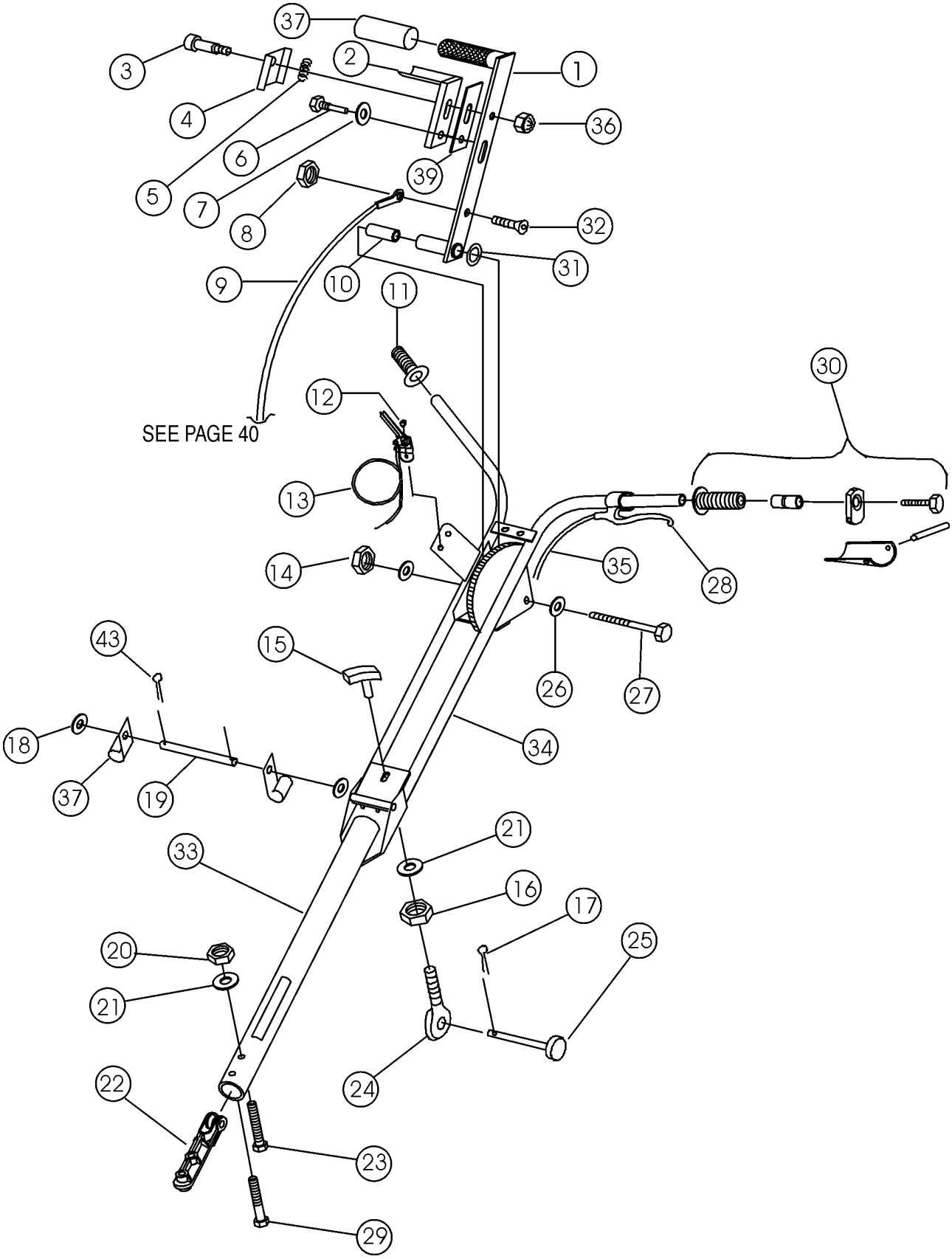

QUICK PITCH ™ HANDLE ASSY.

NO.	PART NO.	PART NAME	QTY.	REMARKS
1	10657	PITCH CONTROL HANDLE	1	
2	10881	LATCHING BAR	1	
3	3910382	SHOULDER BOLT 3/8 X 3/8	1	
4	10655	LATCH RETURN SPRING COVER	1	
5	10654	LATCH RETURN SPRING	1	
6	10659	QP LATCHING BOLT	1	
6	10878	QP LATCHING BOLT	1	
7	0161 C	LOCK WASHER 5/16”	1	
8	10024	LOCK NUT 1/4- 20	1	
9	1714	CABLE, PITCH CONTROL	1	
10	10658	CONTROL HANDLE SUPPORT TUBE	1	
11	0189	HANDLE GRIP	1	
12	0304	SCREW, RHM 10- 24 X 1/4”	2	
13	0302	THROTTLE ASSEMBLY CABLE	1	
14	5283	LOCK NUT 5/16- 18	1	
15	10651	STAR WHEEL	1	
16	1456	NUT, HEX FINISH 3/8- 16	1	
17	3216	COTTER PIN	3	
18	0948	FLAT WASHER 1/4”	2	
19	10629	HANDLE HINGE PIN	1	
20	10133	LOCK NUT 3/8- 16	2	
21	10136	FLAT WASHER 3/8”	3	
22	20280	SUPPORT BLOCK	1	
23	21017	SCREW, HHC 3/8- 16 X 3.25 FULL THRD	1	
24	10701	SWING BOLT	1	
25	5291	CLEVIS PIN	1	
26	0300 B	FLAT WASHER 5/16”	2	
27	0669 A	SCREW, HHC 5/16- 18 X 2-1/4”	1	
28	1512	CLUTCH HAND LEVER	1	
29	1493	SCREW, HHC 3/8 - 16 X 3.25	1	
30	10036	CLUTCH ASSIST HANDLE ASSY.	1	
31	10660	SHIM	1	
32	3164	SCREW, FHSC 1/4- 20 X 1”	1	
33	21438	LOWER HANDLE	1	
34	10635	UPPER HANDLE	1	
35	10653	CLUTCH CABLE ASSY.	1	
36	10676	ACORN NUT 5/16- 18	1	
37	8128	CLAMP	2	
39	11015	HANDLE SLIDER	1	

SPIDER ASSY.

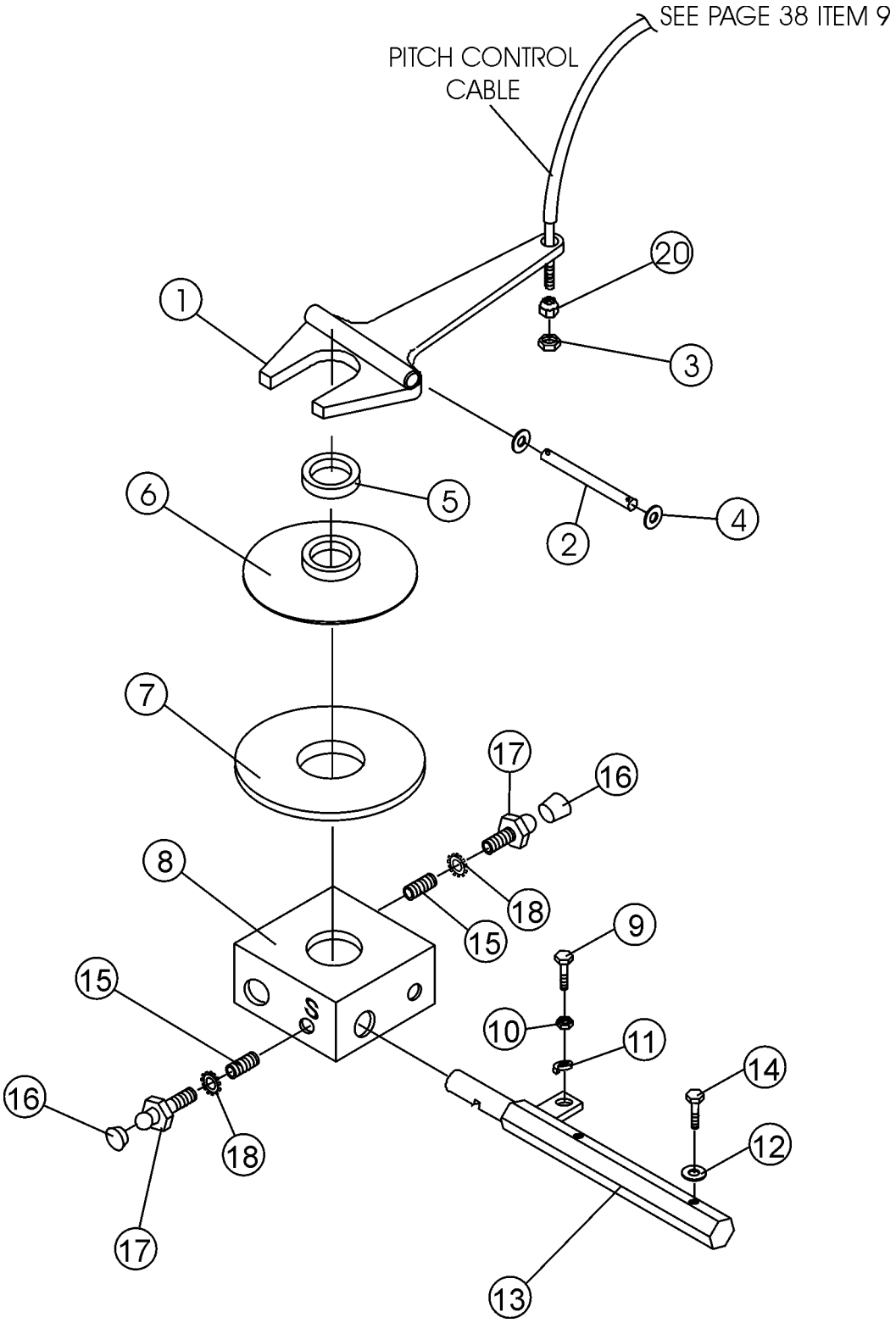
SEE PAGE 38 ITEM 9
PITCH CONTROL CABLE
20
1
3
6
5
4
2
7
17
16
8
18
15
9
15
10
11
14
16
18
12
17
13

SPIDER ASSY.

NO.	PART NO.	PART NAME	QTY.	REMARKS
1	21477	YOKE	1	
2	20801	YOKE PIN	1	
3	1116	NUT, BRASS JAM 5/16- 18	1	
4	20802	SNAP RING	2	
5	10607	THRUST BEARING	1	
6	10567	THRUST COLLAR	1	
7	10639	WEAR PLATE	1	
8	10563	SPIDER	1	
9	0164 B	SCREW, HHC 3/8- 16 X 1-1/4 F.T.	4	
10	1876	NUT, JAM 3/8- 16	4	
11	0166 A	LOCK WASHER 3/8”	4	
12	0181 B	LOCK WASHER 1/4”	8	
13	10768	TROWEL ARM	4	
14	10790	SCREW, HHC M6- 1 X 30MM	8	
15	0685	SCREW, SHS 5/16- 18 X 5/16”	2	
16	1162 A	GREASE ZERK CAP	4	
17	10587	ARM RETAINING SCREW	4	
18	1875	WASHER, INT. SHKP. 3/8”	4	
20	10698	NUT, ADJUSTING 5/16- 18	1	

GEARBOX ASSY.

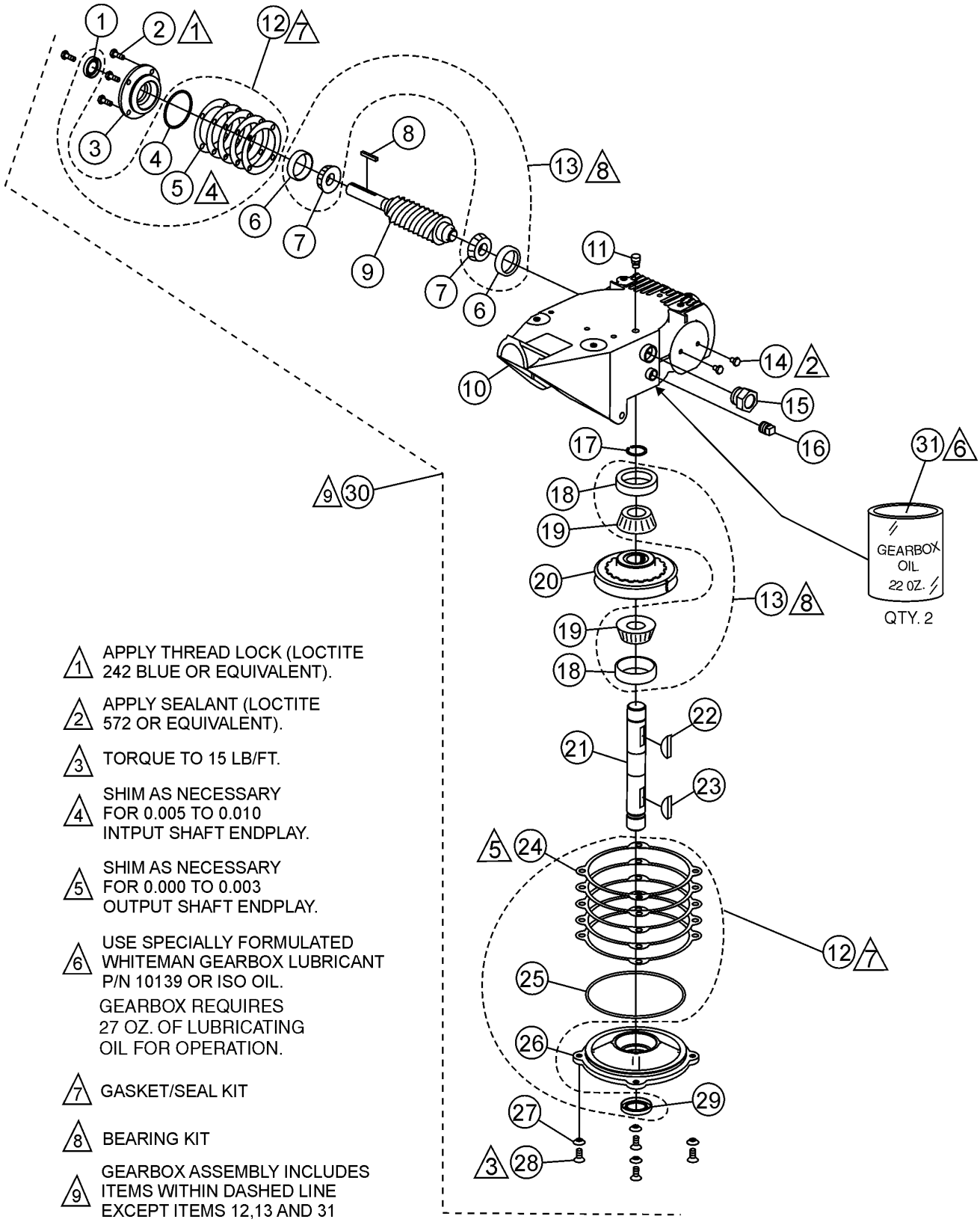

1 APPLY THREAD LOCK (LOCTITE 242 BLUE OR EQUIVALENT).

2 APPLY SEALANT (LOCTITE 572 OR EQUIVALENT).

3 TORQUE TO 15 LB/FT.

4 SHIM AS NECESSARY FOR 0.005 TO 0.010 INTPUT SHAFT ENDPLAY.

5 SHIM AS NECESSARY FOR 0.000 TO 0.003 OUTPUT SHAFT ENDPLAY.

6 USE SPECIALLY FORMULATED WHITEMAN GEARBOX LUBRICANT P/N 10139 OR ISO OIL.
GEARBOX REQUIRES 27 OZ. OF LUBRICATING OIL FOR OPERATION.

7 GASKET/SEAL KIT

8 BEARING KIT

9 GEARBOX ASSEMBLY INCLUDES ITEMS WITHIN DASHED LINE EXCEPT ITEMS 12,13 AND 31

GEARBOX ASSY.

NO.	PART NO.	PART NAME	QTY.	REMARKS
1%*	0753	SEAL, OIL NATIONAL	1	
2%	0131 A	SCREW, HHC 1/4-20 X 3/4	4	
3%	12876	FLANGE, INPUT SHAFT	1	
4%*	20395	RING, O -139 BUNA N	1	
5%*	20397	SHIM, INPUT 0.002 THICK	1	
5%*	20398	SHIM, INPUT 0.003 THICK	1	
5%*	20399	SHIM, INPUT 0.005 THICK	1	
5%*	20400	SHIM, INPUT 0.010 THICK	1	
5%*	20401	SHIM, INPUT 0.020 THICK	1	
6%#	21218	BEARING, CUP, TIMKEN	2	
7%#	20465	BEARING, CONE, TIMKEN	2	
8%	0627	KEY, SQUARE 3/16 X 1 1/4	1	
9%	1851	GEAR, WORM & SHAFT ASSY.	1	
10%	21454	CASE, GEAR	1	
11%	21218	VENT, AIR	1	
12	21046	GASKET/SEAL KIT	1	INCLUDES ITEMS W/*
13	21047	BEARING KIT	1	INCLUDES ITEMS W/ #
14%	20476	SCREW, HHC 1/4-28 X 3/8	2	
15%	21033	SIGHT GLASS, 3/4 M PIPE STEEL	1	
16%	0121 A	FITTING, PLUG 3/8 MP SQ HEAD	1	
17%	1138	RING, SNAP, TRUARC 5100-112	1	
18%#	20475	BEARING, CUP TIMKEN	2	
19%#	20474	BEARING, CONE TIMKEN	2	
20%	1140	GEAR, WORM, BRONZE	1	
21%	21435	SHAFT, OUTPUT	1	
22%	1139	KEY, WOODRUFF #21 HARDENED	1	
23%	1238	KEY, WOODRUFF #25	1	
24%*	20402	SHIM, OUTPUT 0.002 THICK	1	
24%*	20403	SHIM, OUTPUT 0.003 THICK	1	
24%*	20404	SHIM, OUTPUT 0.005 THICK	1	
24%*	20405	SHIM, OUTPUT 0.010 THICK	1	
24%*	20406	SHIM, OUTPUT 0.020 THICK	1	
25%*	20396	RING, O -257 BUNA N	1	
26%	12875	COVER, GEARBOX	1	
27%	10235	WASHER, C/S EXT. SHKP	4	
28%	1146	SCREW, FHSC 5/16-18 X 1, NYLOC NP	4	
29%*	0254	SEAL, OIL, NATIONAL	1	
30	20407	GEARBOX ASSY.	1	INCLUDES ITEMS W/ %
31	10139	GEARBOX OIL 22 OZ.	2	REQUIRES 27 OZ.

ENGINE, 4 HP HONDA ASSY.

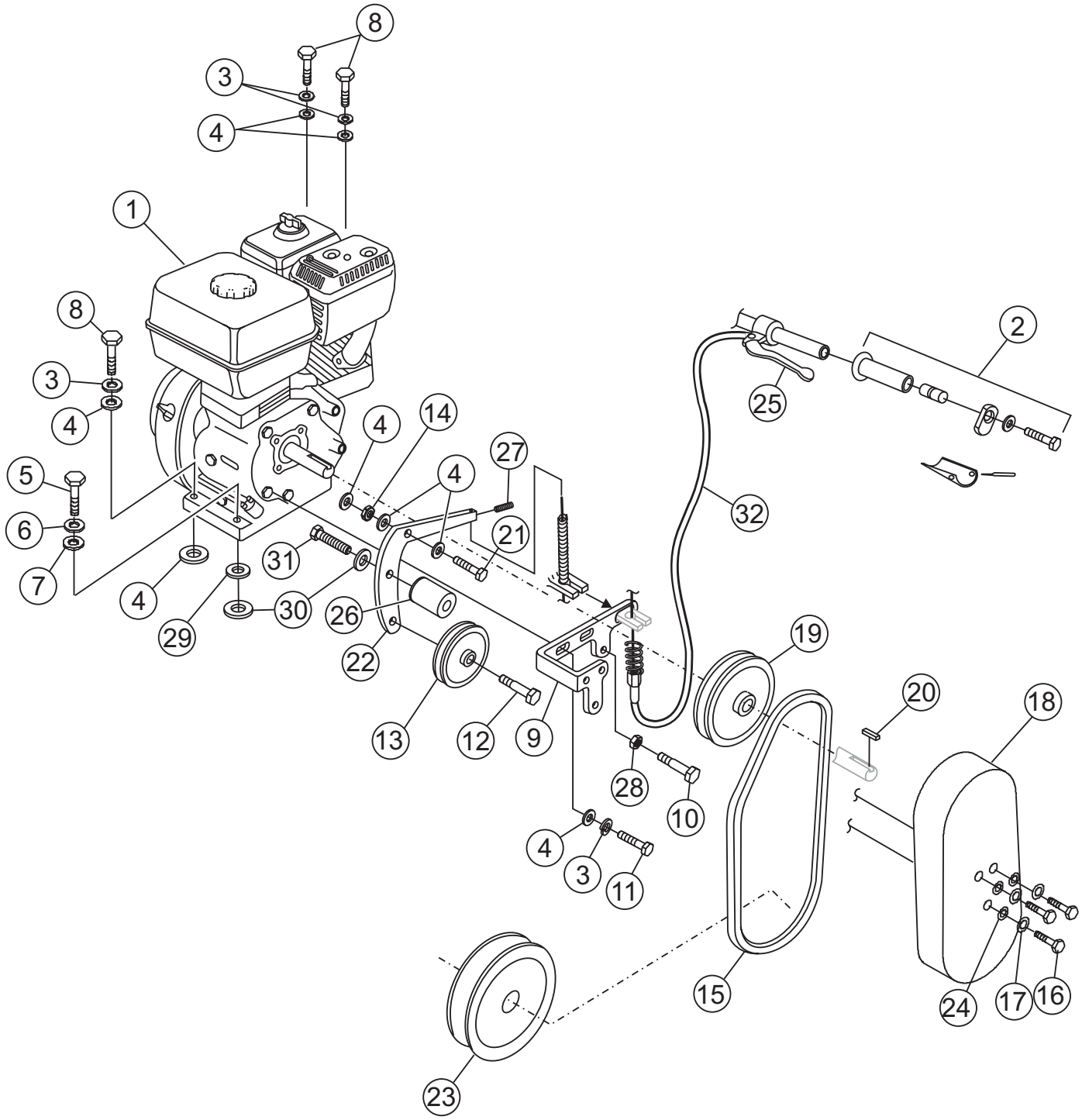

ENGINE, 4 HP HONDA ASSY.

NO.	PART NO.	PART NAME	QTY.	REMARKS
1	21387	ENGINE, 4 HP. HONDA GX120K1QX2	1	
2	10036	HANDLE ASSY., CLUTCH ASSIST	1	
3	0161 C	LOCK WASHER 5/16”	5	
4	0300 B	FLAT WASHER 5/16”	11	
5	1284	SCREW, HHCS 3/8- 16 X 1”	1	
6	0166 A	LOCK WASHER 3/8”	1	
7	10136	FLAT WASHER 3/8”	1	
8	0105	SCREW, HHC 5/16- 18 X 1-1/2”	2	
9	10644	CLUTCH BRACKET	1	
10	5277	SCREW, HHC 1/4- 20 X 1-1/2”	1	
11	10229	SCREW, HHC 5/16 - 24 X 1"	2	
12	1284	SCREW, HHC 3/8 -16 X 1-1/2”	1	
13	10608	IDLER PULLEY	1	
14	6014 C	NUT, HEX 5/16 X 24	1	
15	10611	BELT (A21)	1	
16	0730	SCREW, HHC 1/4- 20 X 1”	3	
17	0181 B	LOCK WASHER 1/4”	5	
18	10661	BELT GUARD	1	..... SAFETY ITEM
19	21492	PULLEY	1	
20	10909	SQUARE KEY 3/16 X 3/16 X 13/16”	1	
21	10181	SCREW, HHC 5/16 - 24 X 1-1/4"	1	
22	20979	CLUTCH LEVER	1	
23	10610	PULLEY	1	
24	0948	FLAT WASHER 1/4”	5	
25	1512	CONTROL LEVER, HAND CLUTCH	1	
26	20981	SHOE, BELT HAND CLUTCH	1	
27	10450	SHS 10- 32 X 1/4”	1	
28	0949	HEX NUT 1/4- 20	1	
29	1733	WASHER, 1/2 X 1/32	1	
30	13351	WASHER, FLAT USS 3/8 EXT. THK.	1	
31	1672	SCREW, HHC 3/8 -24 X 1”	1	
32	10936	CABLE ASSY., HAND CLUTCH	1	

GUARD RING ASSY.

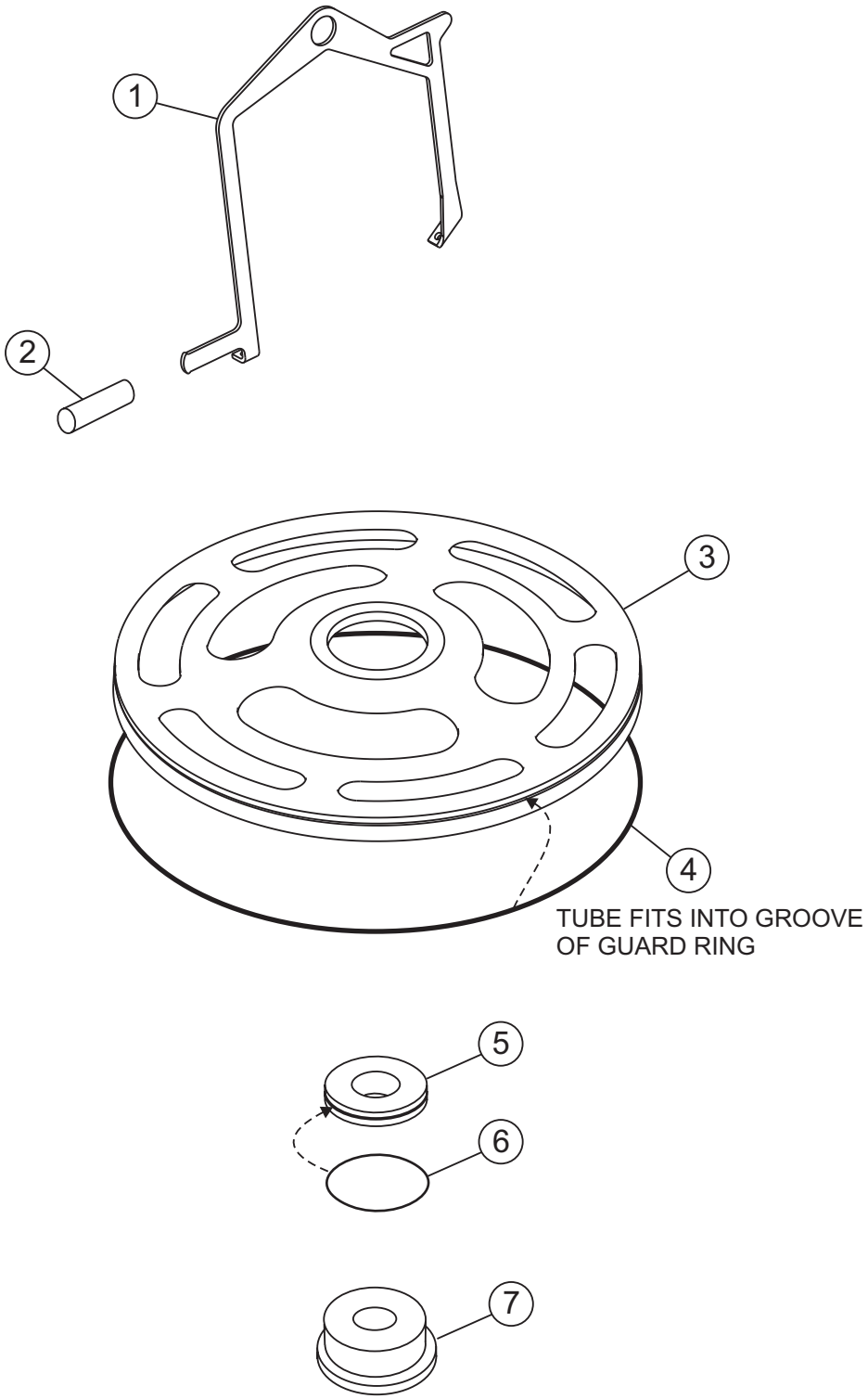

GUARD RING ASSY.

NO.	PART NO.	PART NAME	QTY.	REMARKS
1	21502	LIFTING BALE	1	ACCESSORY ITEM CONTACT UNIT SALES
2	1724	GRIP	1	
3	21433	GUARD RING	1	
4	21443	TUBE, GROOVE GUARD RING	1	
5	21441	BEARING	1	INCLUDES ITEMS W/*
6*	21480	RING	1	
7	21434	SLEEVE, PITCH	1	

BLADES & PAN ASSY.

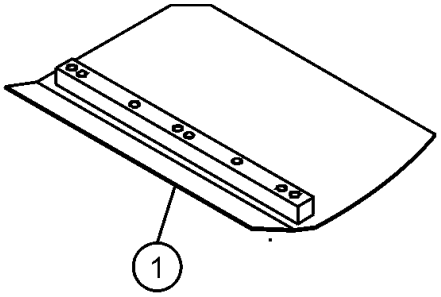

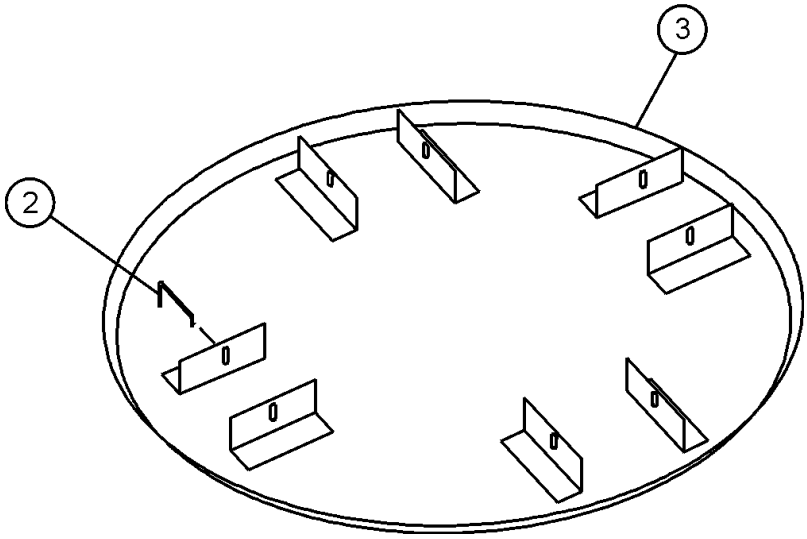

BLADES & PAN ASSY.

NO.	PART NO.	PART NAME	QTY.	REMARKS
1		COMBO FLOAT & FINISH BLADE	4	CONTACT UNIT SALES DEPT./ACCESSORY ITEM
2		FLOAT DISC LATCH PIN	4	CONTACT UNIT SALES DEPT./ACCESSORY ITEM
3		FLOAT DISC	1	CONTACT UNIT SALES DEPT./ACCESSORY ITEM

AIR CLEANER (DUAL) ASSY.

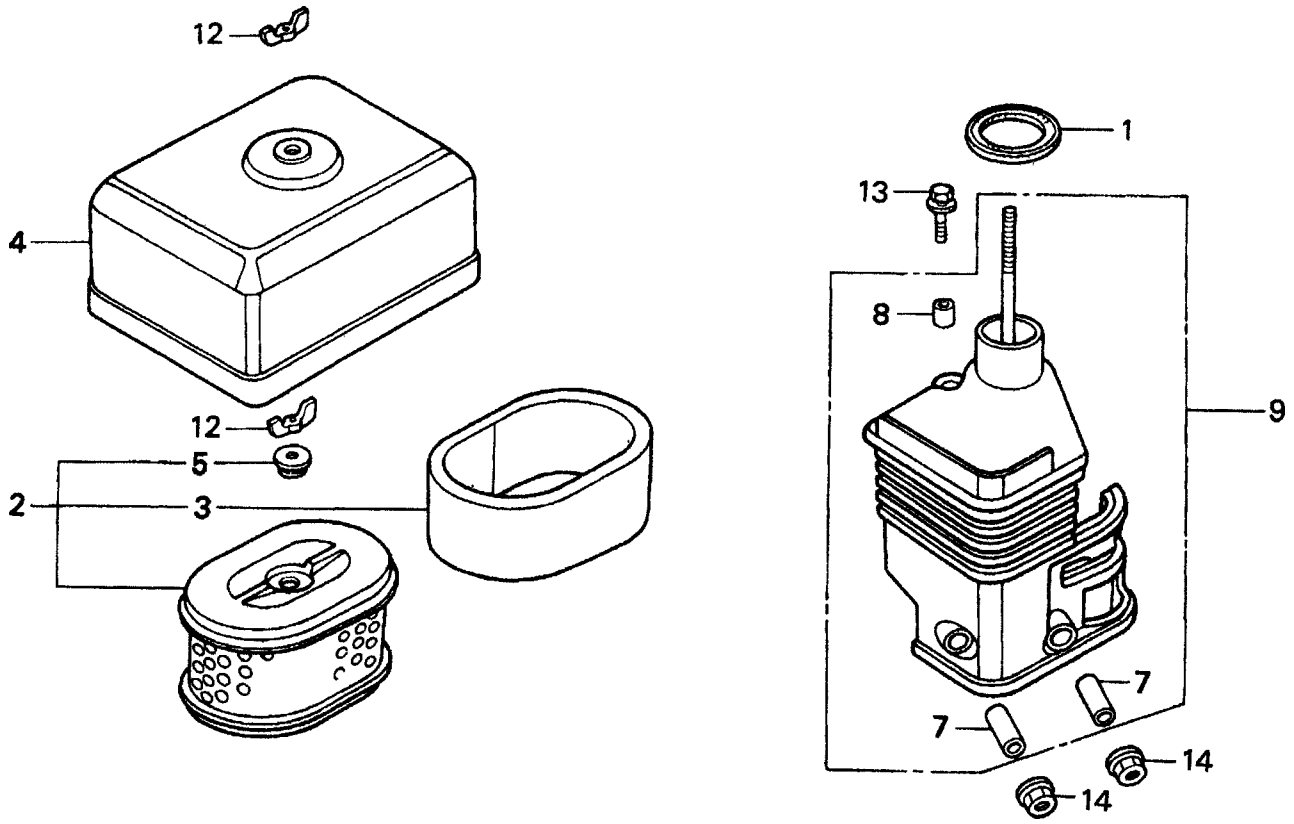

AIR CLEANER (DUAL) ASSY.

NO.	PART NO.	PART NAME	QTY.	REMARKS
1	16271ZE1000	GASKET, ELBOW	1	
2	17210ZE0505	ELEMENT, AIR CLEANER (DUAL)	1	INCLUDES ITEMS W/*
3*	17218ZE0505	FILTER, OUTER	1	
4	17230ZE0820	COVER, AIR CLEANER (DUAL)	1	
5*	17232891000	GROMMET, AIR CLEANER	1	
7#	17238ZE0010	COLLAR, AIR CLEANER	2	
8#	17239ZE1000	COLLAR B, AIR CLEANER	1	
9	17410ZE0030	ELBOW, AIR CLEANER	1	INCLUDES ITEMS W/#
12	90325044000	WINGNUT, TOOL BOX SETTING	2	
13	957010602000	BOLT, FLANGE 6X20	1	
14	9405006000	NUT, FLANGE 6MM	2	

CAMSHAFT ASSY.

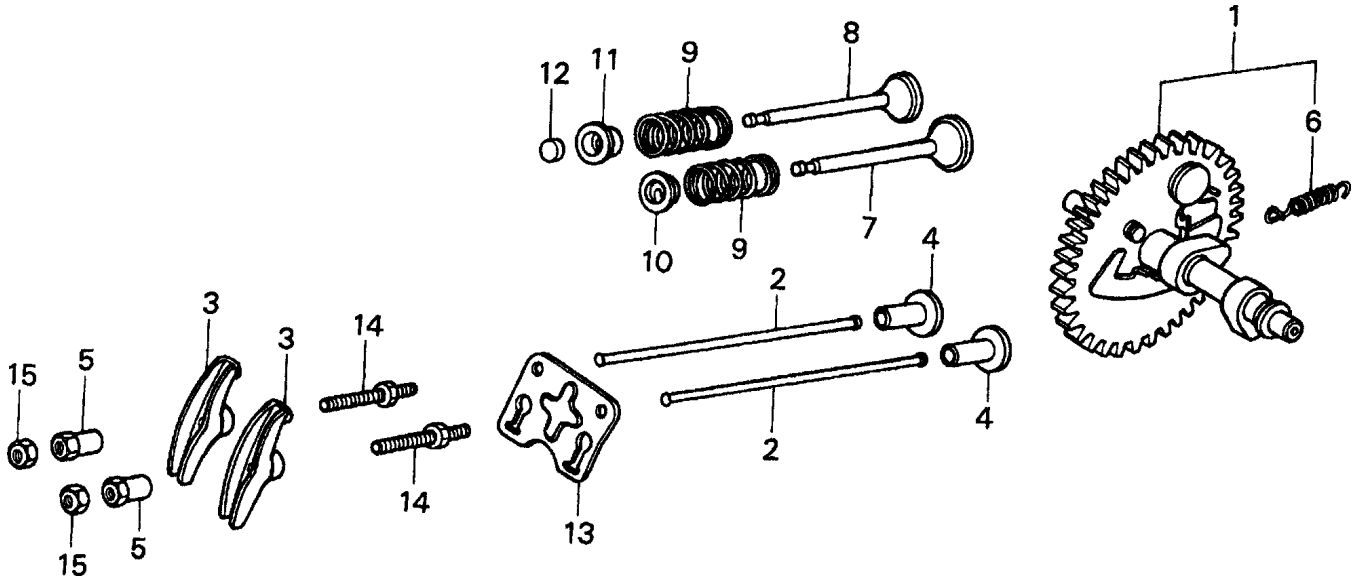

CAMSHAFT ASSY.

NO.	PART NO.	PART NAME	QTY.	REMARKS
1	14100ZE0812	CAMSHAFT ASSEMBLY	1	INCLUDES ITEMS W/*
2	14410ZE0010	ROD, PUSH	2	
3	14431ZE1000	ARM, VALVE ROCKER	2	
4	14441ZE1010	LIFTER, VALVE	2	
5	14451ZE1013	PIVOT, ROCKER ARM	2	
6*	14568ZE1000	SPRING, WEIGHT RETURN	1	
7	14711ZF0010	VALVE, IN.	1	
8	14721ZH7810	VALVE, EX. (HAUST)	1	
9	14751ZF1000	SPRING, VALVE	2	
10	14771ZE1000	RETAINER, IN. VALVE SPRING	1	
11	14773ZE1000	RETAINER, EX. VALVE SPRING	1	
12	14781ZE1000	ROTATOR, VALVE	1	
13	14791ZE0010	PLATE, PUSH ROD GUIDE	1	
14	90012ZE0010	BOLT, PIVOT 8MM	2	
15	90206ZE1000	NUT, PIVOT ADJ.	2	

CARBURETOR ASSY.

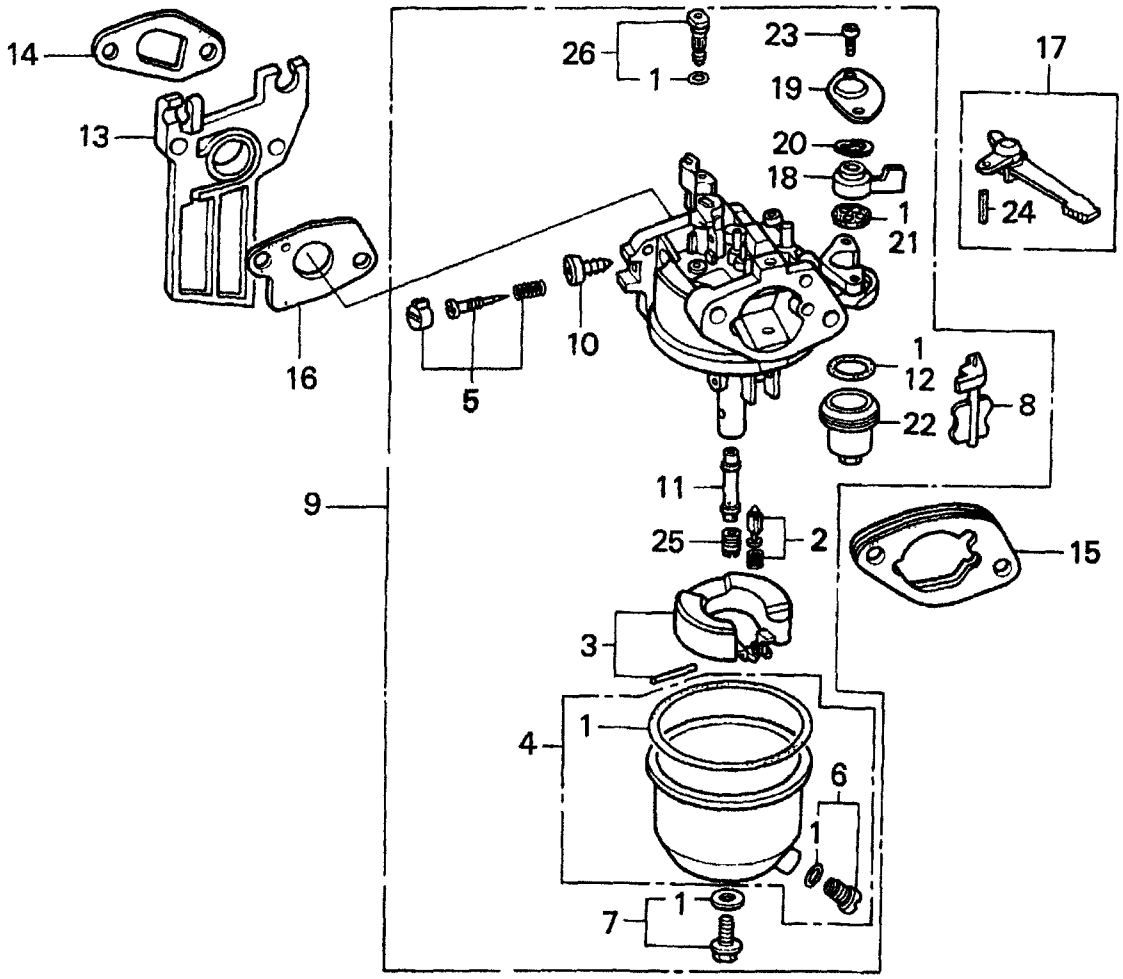

CARBURETOR ASSY.

NO.	PART NO.	PART NAME	QTY.	REMARKS
1*	16010ZE1812	GASKET SET	1	
2*	16011ZE0005	VALVE SET, FLOAT	1	
3*	16013ZE0005	FLOAT SET	1	
4*	16015ZE1811	CHAMBER SET, FLOAT	1	
5*	16016ZH7W01	SCREW SET	1	
6*	16024ZE1811	SCREW SET, DRAIN	1	
7*	16028ZE0005	SCREW SET B	1	
8*	16044ZE0005	CHOKE SET	1	
9	16100ZH8W51	CARBURETOR ASSY. (BE65B B)	1	INCLUDES ITEMS W/*
10*	16124ZE0005	SCREW, THROTTLE STOP	1	
11*	16166ZH7W50	NOZZLE, MAIN	1	
12*	16173001004	O-RING	1	
13	16211ZE1000	INSULATOR, CARBURETOR	1	
14	16212ZH7800	GASKET, INSULATOR	1	
15	16220ZE1020	SPACER, CARBURETOR	1	
16	16221ZH8801	GASKET, CARBURETOR	1	
17	16610ZE1000	LEVER, CHOKE (STD)	1	INCLUDES ITEMS W/#
18*	16953ZE1812	LEVER, VALVE	1	
19*	16954ZE1811	PLATE, LEVER SETTING	1	
20*	16956ZE1811	SPRING, VALVE LEVER	1	
21*	16957ZE1812	GASKET, VALVE	1	
22*	16967ZE0811	CUP, FUEL STRAINER	1	
23*	93500030080G	SCREW, PAN (3 X 6)	2	
24#	9430520122	PIN, SPRING (2 X 12)	1	
25	99101ZH80550	JET, MAIN (#55) OPTIONAL	1	
25	99101ZH80580	JET, MAIN (#58) OPTIONAL	1	
25*	99101ZH80600	JET, MAIN (#60)	1	
26*	99204ZE00350	JET, SET, PILOT (#35)	1	

CONTROL ASSY.

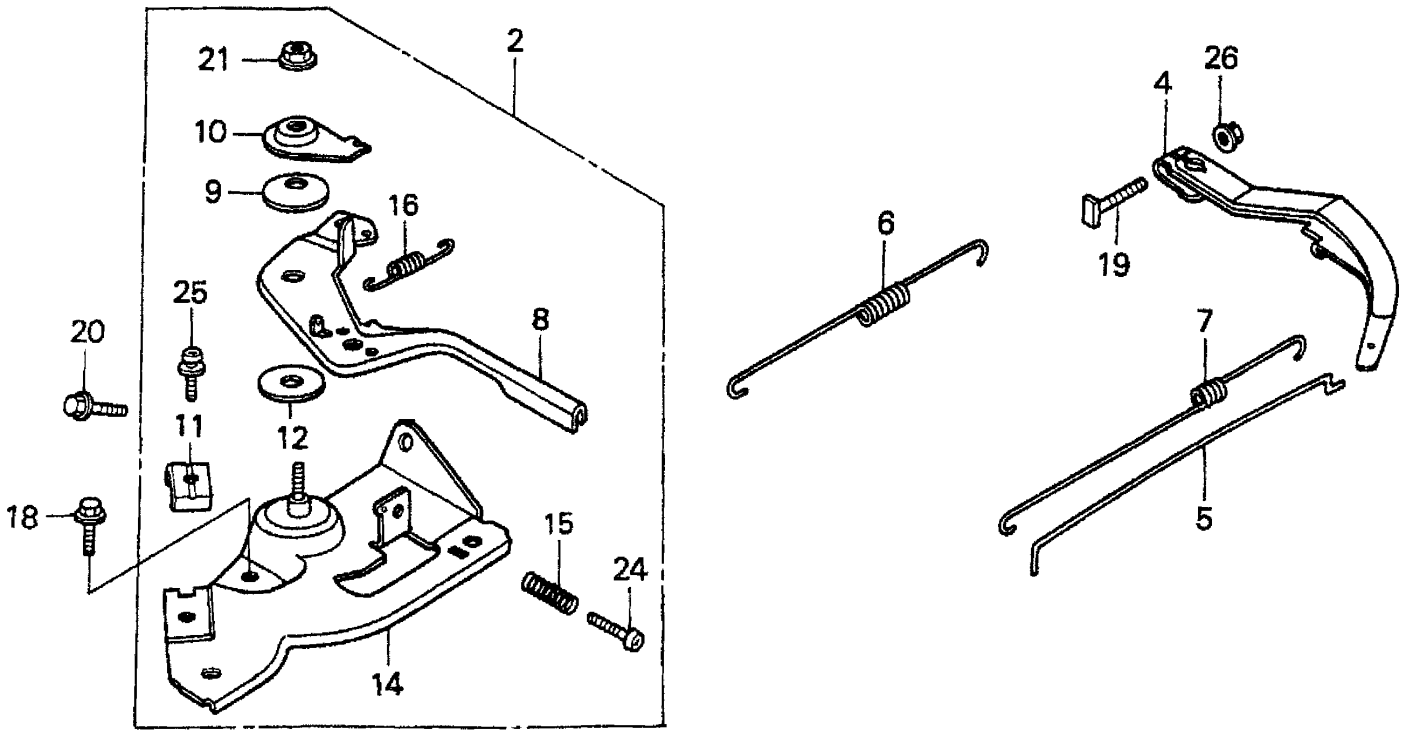

CONTROL ASSY.

NO.	PART NO.	PART NAME	QTY.	REMARKS
2	16500ZH7820	CONTROL ASSEMBLY	1	INCLUDES ITEMS W/*
4	16551ZE0010	ARM, GOVERNOR	1	
5	16555ZE0000	ROD, GOVERNOR	1	
6	16561ZE0020	SPRING, GOVERNOR	1	
7	16562ZE0020	SPRING, THROTTLE RETURN	1	
8*	16571ZH7000	LEVER, CONTROL	1	
9*	16574ZE1000	SPRING, LEVER	1	
10*	16575ZH8000	WASHER, CONTROL LEVER	1	
11*	16576891000	HOLDER, CABLE	1	
12*	16578ZE1000	SPACER, CONTROL LEVER	1	
14*	16580ZH7810	BASE, CONTROL	1	
15*	16584883300	SPRING, CONTROL ADJUSTING	1	
16*	16592ZE1810	SPRING, CABLE RETURN	1	
18	90013883000	BOLT, FLANGE 6X12 (CT200)	1	
19	90015ZE5010	BOLT, GOVERNOR ARM	1	
20	90022888010	BOLT, FLANGE 6X20 (CT200)	1	
21*	90114SA0000	NUT, SELF- LOCK 6MM	1	
24*	93500050250H	SCREW, PAN 5X25	1	
25*	93500050160A	SCREW-WASHER (5X16)	1	
26	9405006000	NUT, FLANGE 6MM	1	

CRANKCASE COVER ASSY.

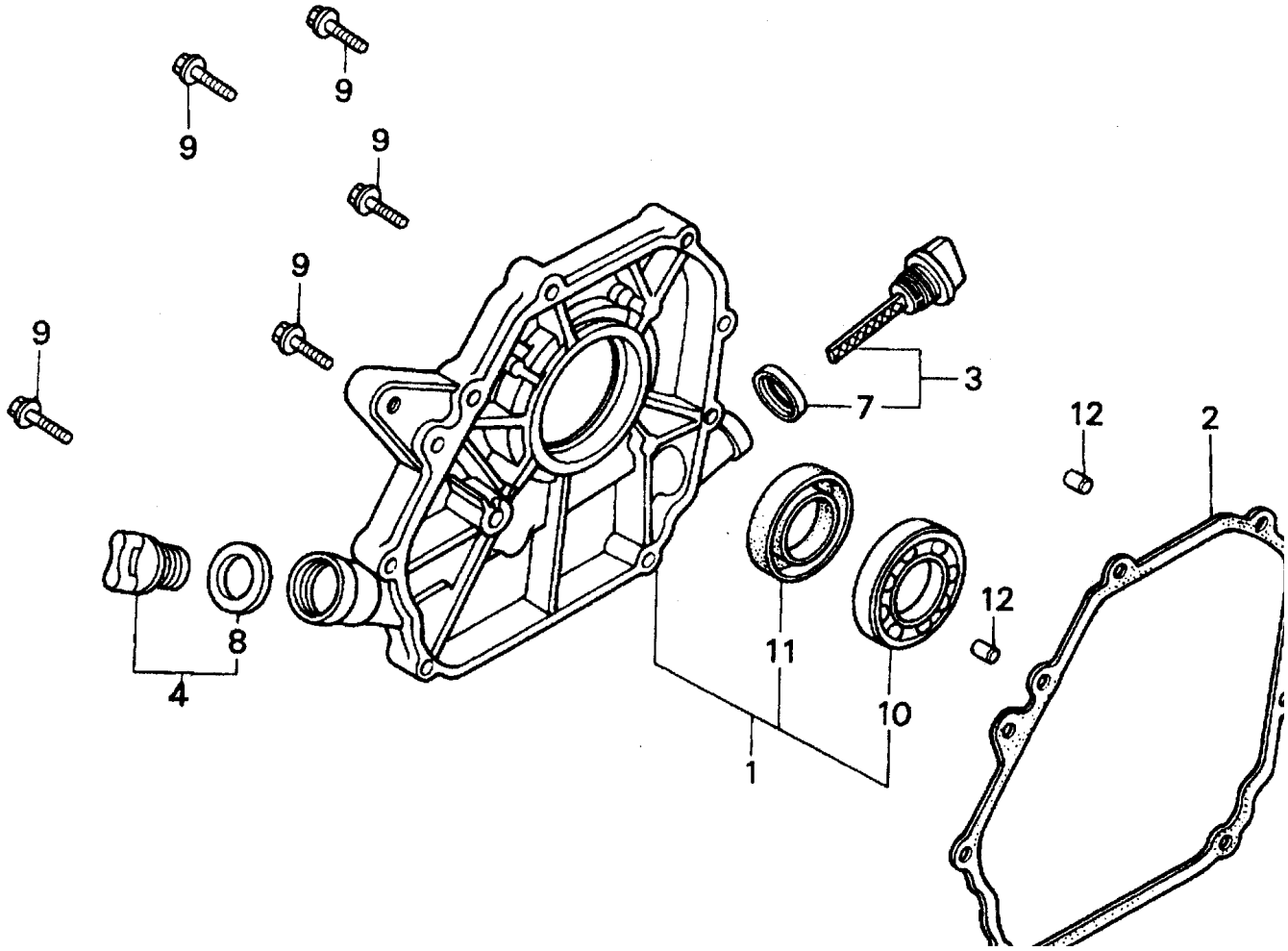

CRANKCASE COVER ASSY.

NO.	PART NO.	PART NAME	QTY.	REMARKS
1	11300ZE0640	COVER ASSEMBLY, CRANKCASE (U- TYPE)	1	INCLUDES ITEMS W/%
2	11381ZH7800	GASKET, CASE COVER	1	
3	15600ZE1003	CAP ASSEMBLY, OIL FILLER	1	INCLUDES ITEMS W/#
4	15600ZG4003	CAP ASSEMBLY, OIL FILLER	1	INCLUDES ITEMS W/*
7#	15625ZE1003	GASKET, OIL FILLER CAP	1	
8*	15625ZE1003	GASKET, OIL FILLER CAP	1	
9	90015883000	BOLT, FLANGE 6X28	7	
10%	91001878003	BEARING, RADIAL BALL	1	
11%	91203ZE0003	OIL SEAL 22X41X6	1	
12	9430108140	PIN A, DOWEL 8X14	2	

CRANKSHAFT ASSY.

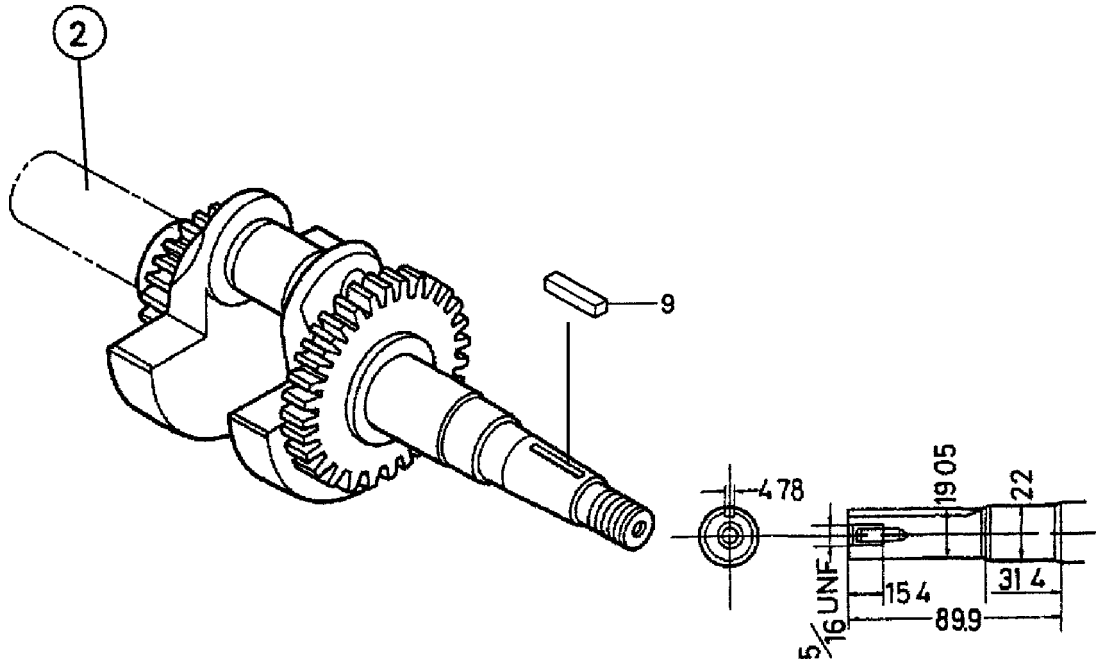

CRANKSHAFT ASSY.

NO.	PART NO.	PART NAME	QTY.	REMARKS
6	13310ZE0650	CRANKSHAFT, Q-TYPE	1	
9	90745ZE1600	KEY (4.78 X 78 X 38)		

CYLINDER BARREL ASSY.

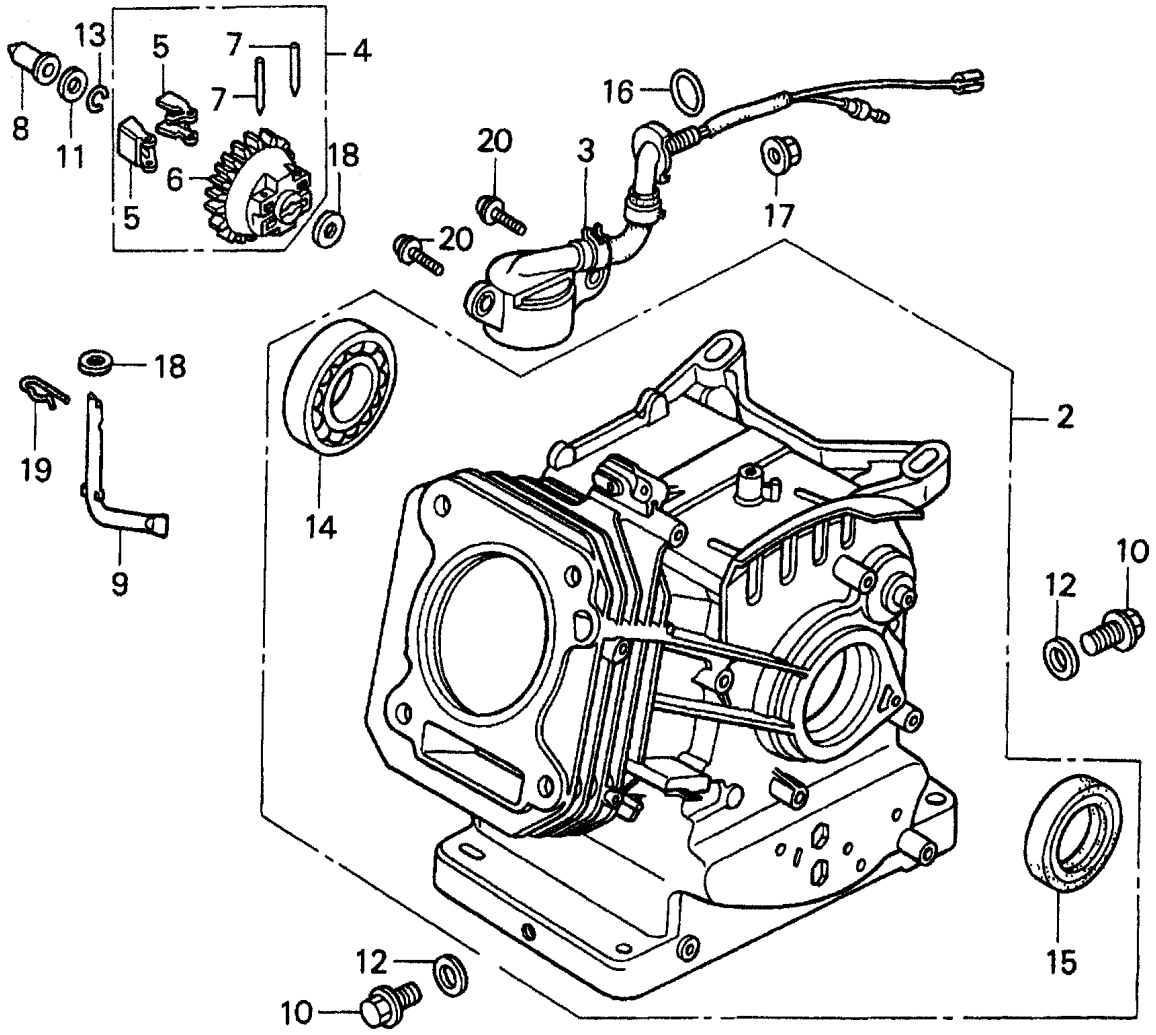

CYLINDER BARREL ASSY.

NO.	PART NO.	PART NAME	QTY.	REMARKS
2	12000ZH7415	CYLINDER ASSEMBLY, 811 (OIL ALERT)	1	INCLUDES ITEMS W/*
3	15510ZE1033	SWITCH ASSEMBLY, OIL LEVEL	1	
4	16510ZE1000	GOVERNOR ASSEMBLLY	1	INCLUDES ITEMS W/#
5#	16511ZE1000	WEIGHT, GOVERNOR	2	
6#	16512ZE1000	HOLDER, GOVERNOR WEIGHT	1	
7#	16513ZE1000	PIN, GOVERNOR WEIGHT	2	
8	16531ZE1000	SLIDER, GOVERNOR	1	
9	16541ZE1000	SHAFT, GOVERNOR ARM	1	
10	90131ZE1000	BOLT, DRAIN PLUG	2	
11	90451ZE1000	WASHER, THRUST 6MM	1	
12	90601ZE1000	WASHER, DRAIN PLUG 10.2MM	2	
13	90602ZE1000	CLIP, GOVERNOR HOLDER	1	
14*	91001878003	BEARING, RADIAL BALL 62/22	1	
15*	91202ZE6003	OIL SEAL 22X35X6	1	
16	91353671003	O- RING 13.5X1.5 (ARAI)	1	
17	9405010000	NUT, FLANGE 10MM	1	
18	9410106800	WASHER, PLAIN 6MM	2	
19	9425108000	PIN, LOCK 8MM	1	
20	957010601200	BOLT, FLANGE 6X12	2	

CYLINDER HEAD ASSY.

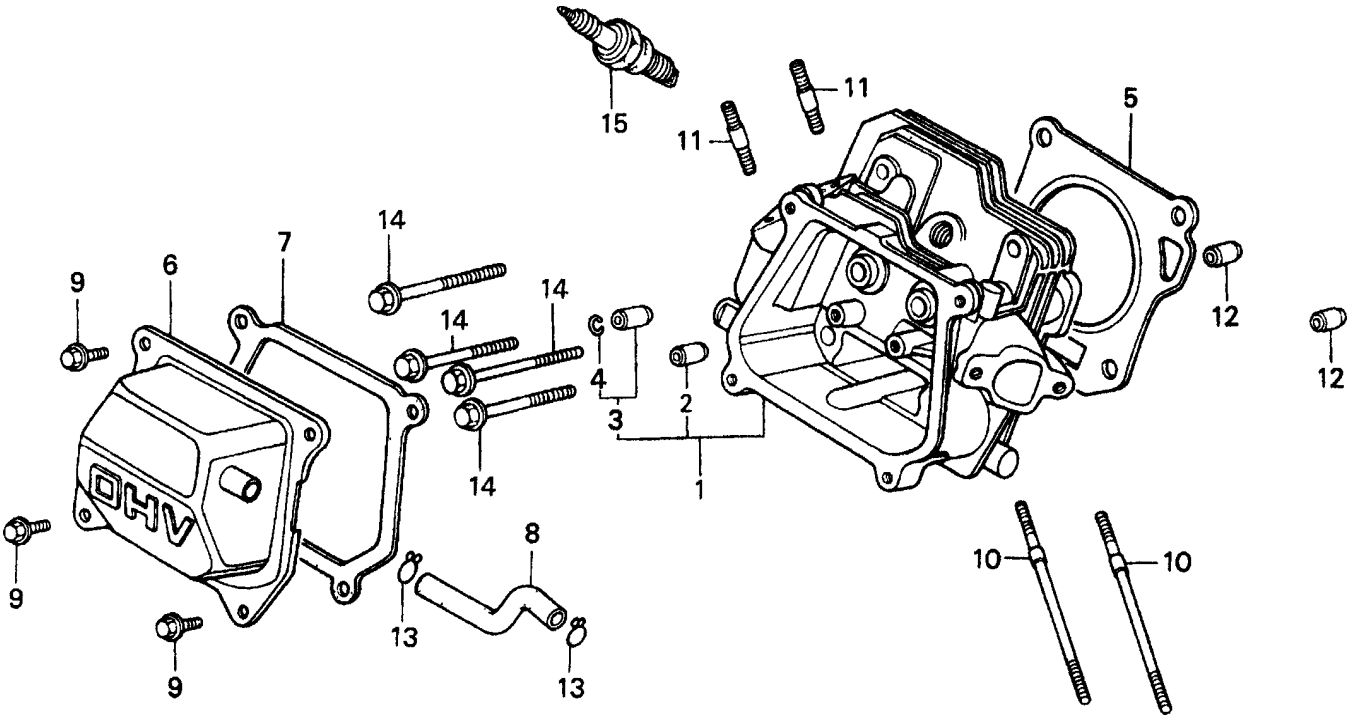

CYLINDER HEAD ASSY.

NO.	PART NO.	PART NAME	QTY.	REMARKS
1	12210ZH7000	CYLINDER HEAD	1	INCLUDES ITEMS W/*
2*	12204ZE1306	GUIDE, VALVE (OS) OPTIONAL	1	
3*	12205ZE1315	GUIDE, EX. VALVE (OS) OPTIONAL	1	INCLUDES ITEMS W/#
4*#	12216ZE5300	CLIP, VALVE GUIDE	1	
5	12251ZH7800	GASKET, CYLINDER HEAD	1	
6	12310ZE1000	COVER, HEAD	1	
6	12310ZE1010	COVER, HEAD	1	
7	12391ZE1000	GASKET, CYLINDER HEAD COVER	1	
8	15721ZH8000	TUBE, BREATHER	1	
9	90013883000	BOLT, FLANGE 6X12 (CT200)	4	
10	90043ZE1020	BOLT, STUD 6X109	2	
11	90047ZE1000	BOLT, STUD 8X32	2	
12	9430110160	PIN, A, DOWEL 10X16	2	
14	957230805500	BOLT, FLANGE 8X55	4	
15	9807955855	SPARK PLUG W16EPR- U (DENSO), OPT.	1	
15	9807956846	SPARK PLUG BPR6ES, (NGK)	1	

FAN COVER ASSY.

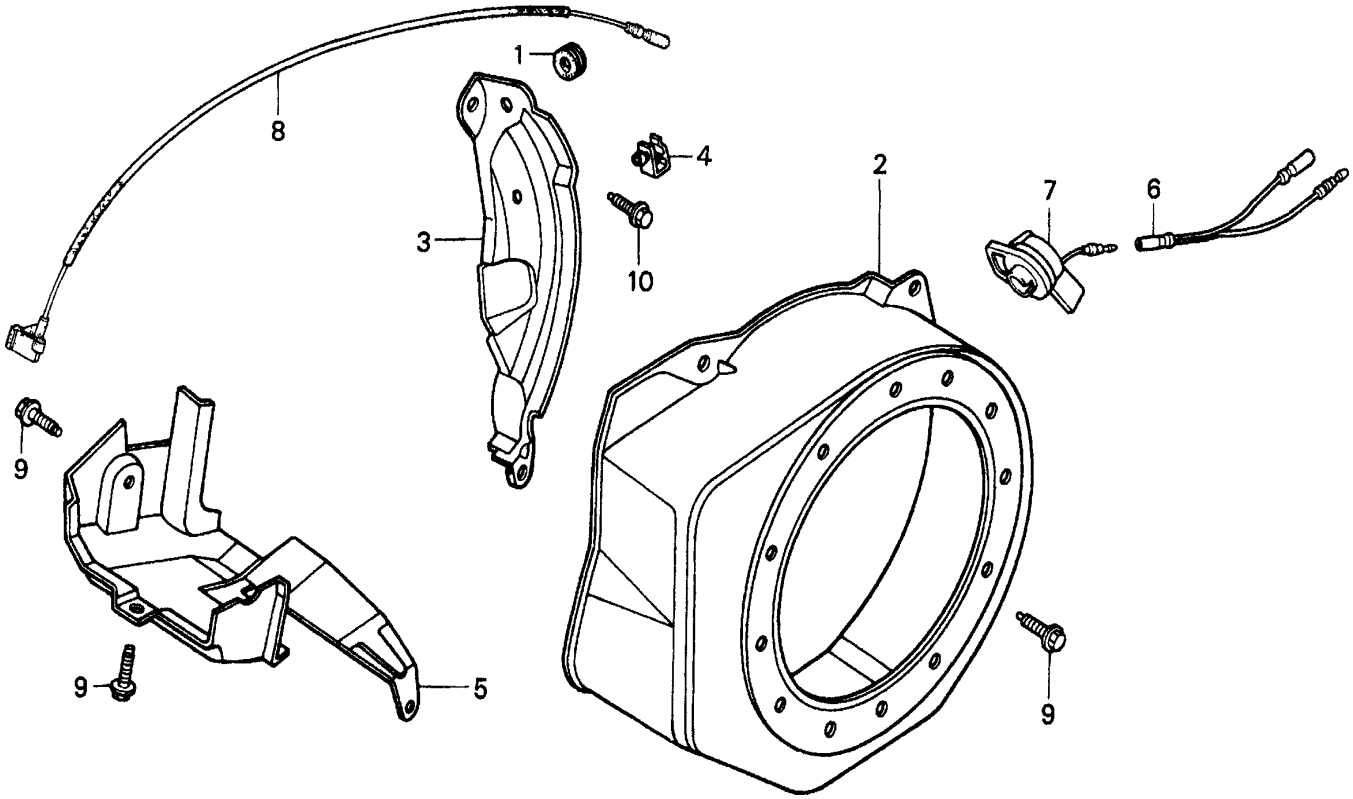

FAN COVER ASSY.

NO.	PART NO.	PART NAME	QTY.	REMARKS
1	11347371300	GROMMET, ADJUSTING COVER	1	
2	19610ZE0000ZE	COVER, FAN *NH1* BLACK	1	
3	19612ZH7810	PLATE, SIDE (OIL ALERT)	1	
4	90601ZH7013	CLIP, HARNESS	1	
5	19630ZH7000	SHROUD	1	
6	32197ZH8003	SUB- HARNESS	1	
7	36100ZH7003	SWITCH ASSEMBLY, ENGINE STOP	1	
8	36101ZE1010	WIRE, STOP SWITCH 370MM	1	
9	90013883000	BOLT, FLANGE 6X12 (CT200)	6	
10	90022888010	BOLT, FLANGE 6X12 (CT200)	1	
11	34150ZH7003	ALERT UNIT, OIL	1	
13	957010600800	BOLT, FLANGE 6X8	1	

FLYWHEEL ASSY.

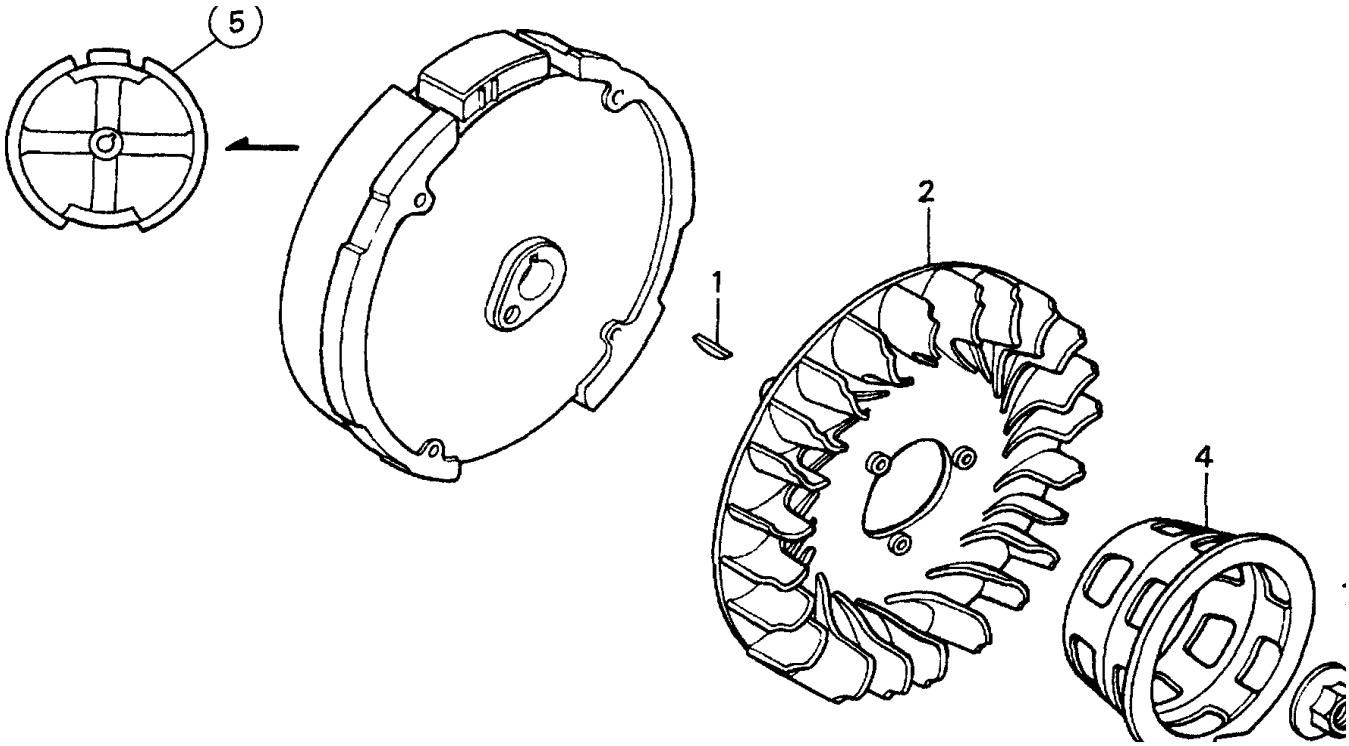

FLYWHEEL ASSY.

NO.	PART NO.	PART NAME	QTY.	REMARKS
1	13331357000	KEY, SPECIAL WOODRUFF 25X18	1	
2	19511ZE0000	FAN, COOLING	1	
4	28451ZH8003	PULLEY, STARTER	1	
5	31100ZE0010	FLYWHEEL	1	
7	90201878003	NUT, SPECIAL 14MM	1	

FUEL TANK ASSY.

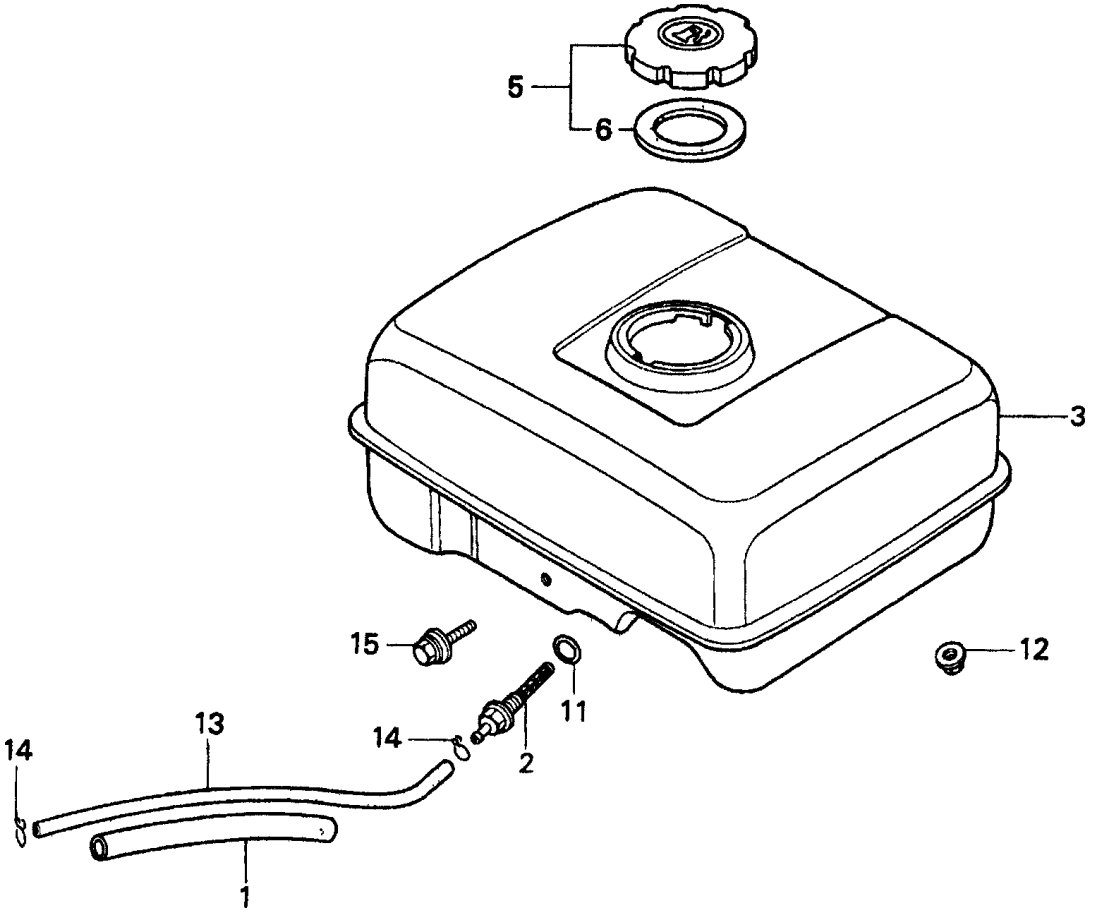

FUEL TANK ASSY.

NO.	PART NO.	PART NAME	QTY.	REMARKS
1	16854ZH8000	RUBBER, SUPPORTER 107MM	1	
2	16955ZE1000	JOINT, FUEL TANK	1	
3	17510ZE0020ZD	TANK, FUEL *NH1* (BLACK)	1	
5	17620ZH7023	CAP, FUEL FILLER	1	..... INCLUDES ITEMS W/*
6*	17631ZH7003	GASKET, FUEL FILLER CAP	1	
11	91353671003	O- RING 13.5X1.5 (ARAI)	1	
12	9405006000	NUT, FLANGE 6MM	2	
13	950014500360M	BULK HOSE, FUEL (4.5X3000) (4.5X140)	1	
14	9500202080	CLIP, TUBE (B8)	2	
15	90004ZH7003	BOLT, FLANGE 6X29	1	

IGNITION COIL ASSY.

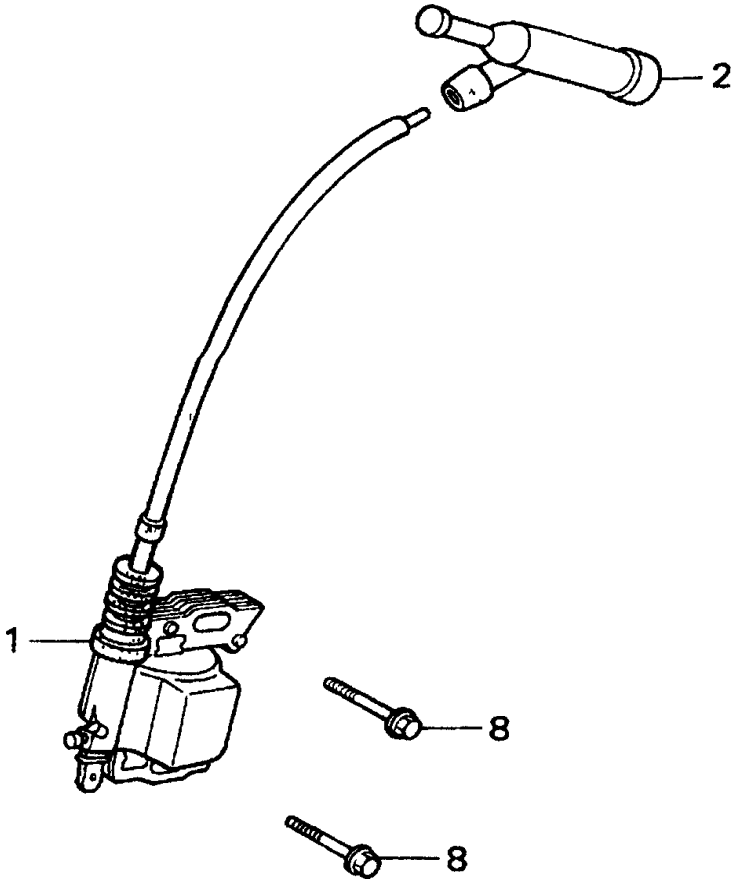

IGNITION COIL ASSY.

NO.	PART NO.	PART NAME	QTY.	REMARKS
1	30500ZE1033	COIL ASSEMBLY, IGNITION	1	
2	30700ZE1013	CAP ASSEMBLY, NOISE SUPPRESSOR	1	
8	90121952000	BOLT, FLANGE 6X25	2	

MUFFLER ASSY.

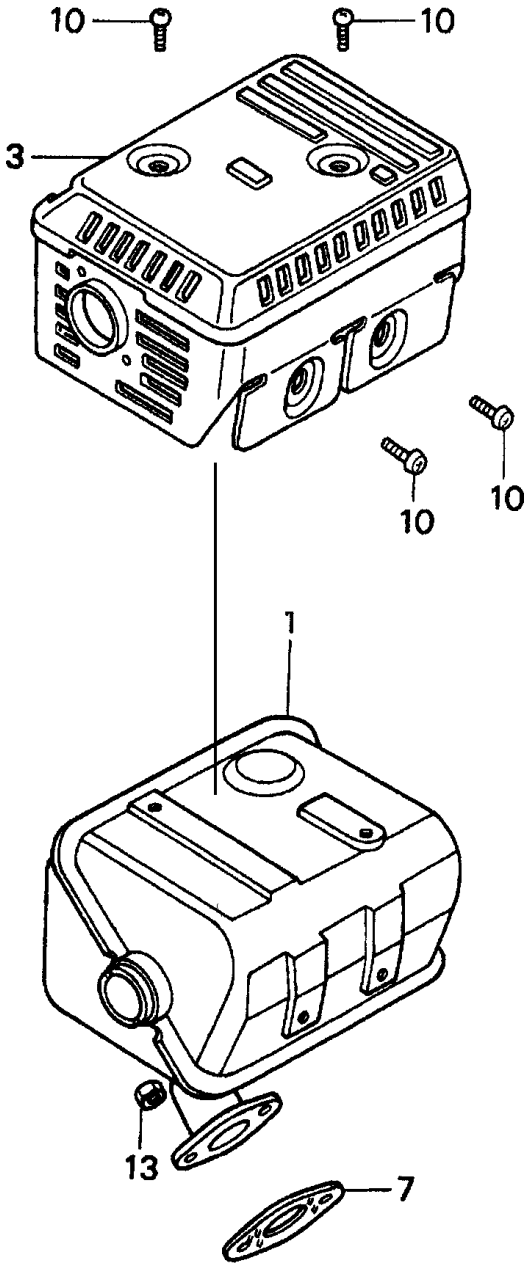

MUFFLER ASSY.

NO.	PART NO.	PART NAME	QTY.	REMARKS
1	18310ZF1000	MUFFLER	1	
3	18320ZF1H01	PROTECTOR, MUFFLER	1	
7	18381ZH8800	GASKET, MUFFLER	1	
10	90050ZE1000	SCREW, TAPPING 5X8	4	
13	94001080000S	NUT, HEX. 8MM	2	

PISTON ASSY.

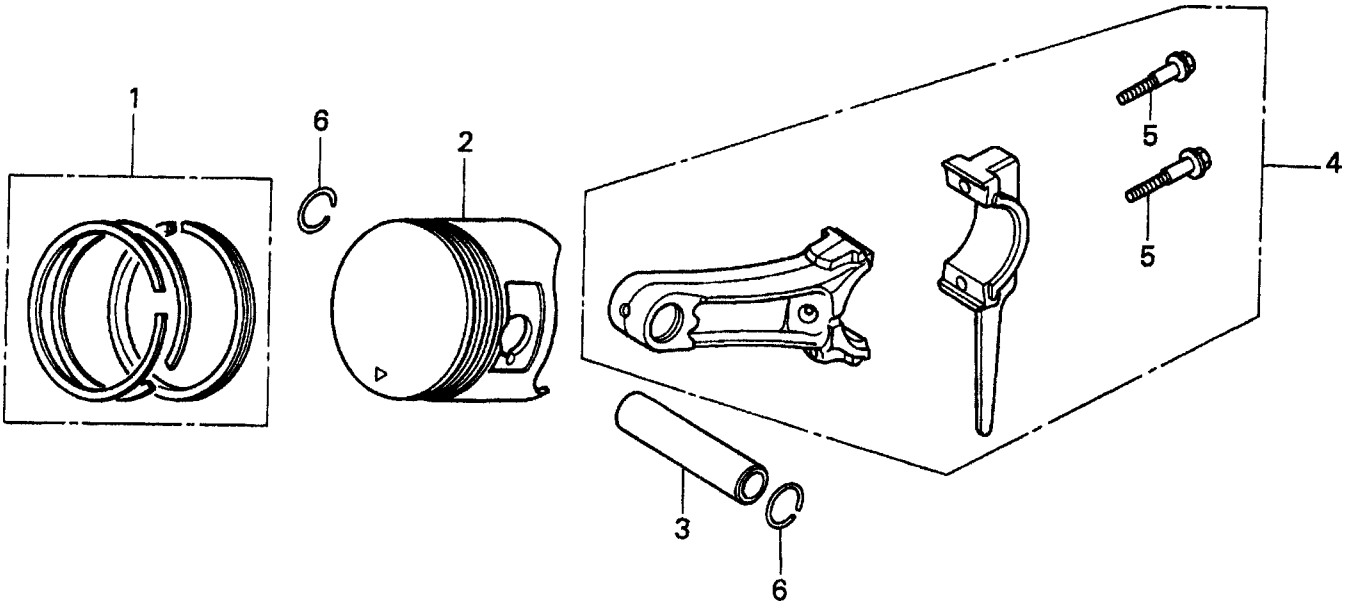

PISTON ASSY.

NO.	PART NO.	PART NAME	QTY.	REMARKS
1	13010ZK7V01	RING SET, PISTON (STANDARD)	1	
1	13011ZK7V01	RING SET, PISTON (OS 0.25), OPTIONAL	1	
1	13012ZK7V01	RING SET, PISTON (OS 0.50), OPTIONAL	1	
1	13013ZK7V01	RING SET, PISTON (0.75), OPTIONAL	1	
2	13101ZH7000	PISTON, STANDARD	1	
2	13102ZH7000	PISTON, OS 0.25 (OPTIONAL)	1	
2	13103ZH7000	PISTON, OS 0.50 (OPTIONAL	1	
2	13104ZH7000	PISTON, 0.75 (OPTIONAL)	1	
3	13111ZE0000	PIN, PISTON	1	
4	132A0ZE0000	ROD ASSY., CONNECTING (UNDERSIZE) OPTIONAL	1	INCLUDES ITEMS W/*
4	13200ZE0000	ROD ASSEMBLY, CONNECTING	1	INCLUDES ITEMS W/*
5*	90001ZE1000	BOLT, CONNECTING ROD	2	
6	90551ZE0000	CLIP, PISTON PIN 13MM	2	

RECOIL STARTER ASSY.

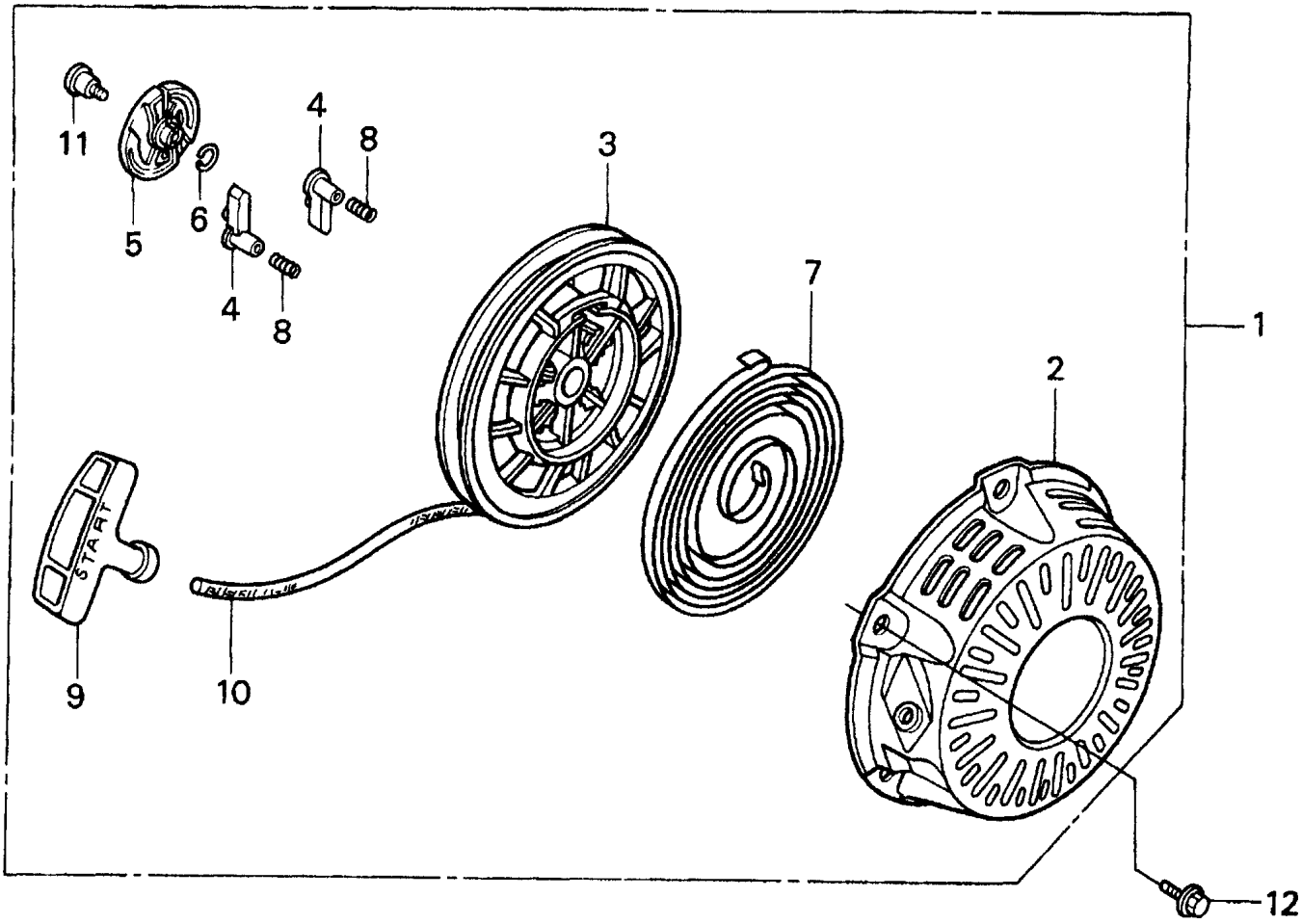

RECOIL STARTER ASSY.

NO.	PART NO.	PART NAME	QTY.	REMARKS
1	28400ZH8013ZB	STARTER ASSY., RECOIL *NH1* (BLACK)	1	INCLUDES ITEMS W/*
2*	28410ZH8003ZB	CASE, RECOIL STARTER	1	
3*	28420ZH8013	REEL, RECOIL STARTER	1	
4*	28422ZH8013	RATCHET, STARTER	2	
5 *	28433ZH8003	GUIDE, RATCHET	1	
6*	28441ZH8003	SPRING, FRICTION	1	
7*	28442ZH8003	SPRING, RECOIL STARTER	1	
8*	28443ZH8003	SPRING, RETURN	2	
9*	28461ZH8003	KNOB, RECOIL STARTER	1	
10*	28462ZH8003	ROPE, RECOIL STARTER	1	
11*	90003ZH8003	SCREW, SETTING	1	
12	90008ZE2003	BOLT, FLANGE 6X10	3	

GASKET KIT ASSY.

NO ART WORK

GASKET KIT ASSY.

NO.	PART NO.	PART NAME	QTY.	REMARKS
1	06111ZH7405	GASKET KIT	1	INCLUDES ITEMS W/*
2*	11381ZH7800	GASKET, CASE COVER	1	
3*	12251ZH7800	GASKET, CYLINDER HEAD	1	
4*	12391ZE1000	GASKET, CYLINDER HEAD COVER	1	
5*	16212ZH7800	GASKET, INSULATOR	1	
6*	16221ZH8801	GASKET, CARBURETOR	1	
7*	18381ZH8800	GASKET, MUFFLER	1	

LABELS ASSY.

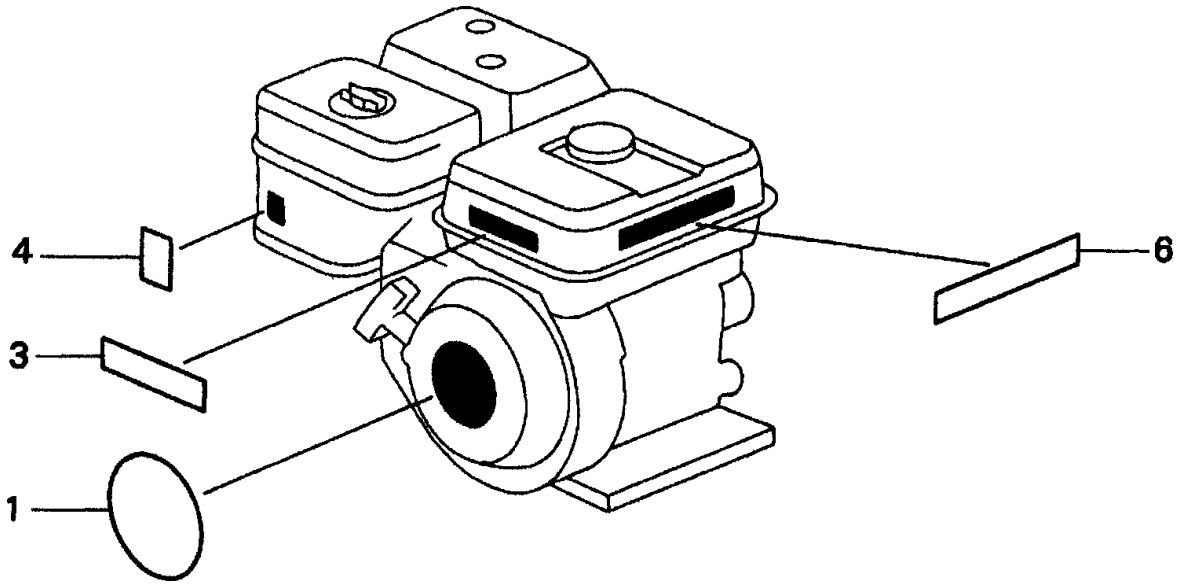

LABELS ASSY.

NO.	PART NO.	PART NAME	QTY.	REMARKS
1	87521ZH7020	EMBLEM	1	
3	87522ZH9000	LABEL, CAUTION	1	
4	87528ZE1810	MARK, CHOKE	1	
6	87532ZH8810	MARK, OIL ALERT (E)	1	

TERMS AND CONDITIONS OF SALE — PARTS

PAYMENT TERMS

Terms of payment for parts are net 10 days.

FREIGHT POLICY

All parts orders will be shipped collect or prepaid with the charges added to the invoice. All shipments are F.O.B. point of origin. Multiquip's responsibility ceases when a signed manifest has been obtained from the carrier, and any claim for shortage or damage must be settled between the consignee and the carrier.

MINIMUM ORDER

The minimum charge for orders from Multiquip is $15.00 net. Customers will be asked for instructions regarding handling of orders not meeting this requirement.

RETURNED GOODS POLICY

Return shipments will be accepted and credit will be allowed, subject to the following provisions:

1. A Returned Material Authorization (RMA) must be approved by Multiquip prior to shipment.
2. To obtain a Return Material Authorization, a list must be provided to Multiquip Parts Sales that defines item numbers, quantities, and descriptions of the items to be returned.
   a. The parts numbers and descriptions must match the current parts price list.
   b. The list must be typed or computer generated.
   c. The list must state the reason(s) for the return.
   d. The list must reference the sales order(s) or invoice(s) under which the items were originally purchased.
   e. The list must include the name and phone number of the person requesting the RMA.
3. A copy of the Return Material Authorization must accompany the return shipment.
4. Freight is at the sender's expense. All parts must be returned freight prepaid to Multiquip's designated receiving point.
5. Parts must be in new and resalable condition, in the original Multiquip package (if any), and with Muiltiquip part numbers clearly marked.
6. The following items are not returnable:
   a. Obsolete parts. (If an item is in the price book and shows as being replaced by another item, it is obsolete.)
   b. Any parts with a limited shelf life (such as gaskets, seals, "O" rings, and other rubber parts) that were purchased more than six months prior to the return date.
   c. Any line item with an extended dealer net price of less than $5.00.
   d. Special order items.
   e. Electrical components.
   f. Paint, chemicals, and lubricants.
   g. Decals and paper products.
   h. Items purchased in kits.
7. The sender will be notified of any material received that is not acceptable.
8. Such material will be held for five working days from notification, pending instructions. If a reply is not received within five days, the material will be returned to the sender at his expense.
9. Credit on returned parts will be issued at dealer net price at time of the original purchase, less a 15% restocking charge.
10. In cases where an item is accepted for which the original purchase document can not be determined, the price will be based on the list price that was effective twelve months prior to the RMA date.
11. Credit issued will be applied to future purchases only.

PRICING AND REBATES

Prices are subject to change without prior notice. Price changes are effective on a specific date and all orders received on or after that date will be billed at the revised price. Rebates for price declines and added charges for price increases will not be made for stock on hand at the time of any price change.

PRICING AND REBATES

Prices are subject to change without prior notice. Price changes are effective on a specific date and all orders received on or after that date will be billed at the revised price. Rebates for price declines and added charges for price increases will not be made for stock on hand at the time of any price change.

Multiquip reserves the right to quote and sell direct to Government agencies, and to Original Equipment Manufacturer (OEM) accounts who use our products as integral parts of their own products.

SPECIAL EXPEDITING SERVICE

A $35.00 surcharge will be added to the invoice for special handling including bus shipments, insured parcel post or in cases where Multiquip must personally deliver the parts to the carrier.

LIMITATIONS OF SELLER'S LIABILITY

Multiquip shall not be liable hereunder for damages in excess of the purchase price of the item with respect to which damages are claimed, and in no event shall Multiquip be liable for loss of profit or good will or for any other special, consequential or incidental damages.

LIMITATION OF WARRANTIES

No warranties, expressed or implied, are made in connection with the sale of parts or trade accessories nor as to any engine not manufactured by Multiquip. Such warranties made in connection with the sale of new, complete units are made exclusively by a statement of warranty packaged with such units, and Multiquip neither assumes nor authorizes any person to assume for it any other obligation or liability whatever in connection with the sale of its products. Apart from such written statement of warranty, there are no warranties, expressed, implied or statutory, which extend beyond the description of the products on the face hereof.

NOTE PAGE

OPERATION & PARTS MANUAL

HERE'S HOW TO GET HELP

PLEASE HAVE THE MODEL AND SERIAL NUMBER *ON-HAND* WHEN CALLING

UNITED STATES

MULTIQUIP CORPORATE OFFICE

18910 Wilmington Ave.
Carson, CA 90746
Contact: mq@multiquip.com

Tel. (800)-421-1244
Fax (310)-537-3927

MEXICO

MQ CIPSA

Carr. Fed. Mexico-Puebla KM 126.5
Momoxpan, Cholula, Puebla 72760 Mexico
Contact: pmastretta@cipsa.com.mx

Tel. (52) 222-225-9900
Fax (52) 222-285-0420

UNITED KINGDOM

MULTIQUIP (UK) LIMITED HEAD OFFICE

Hanover Mill, Fitzroy Street,
Ashton-under-Lyne,
Lancashire OL7 0TL
Contact: kcassell@multiquip.com.uk

Tel. 0161 339 2223
Fax 0161 339 3226

CANADA

MULTIQUIP

4110 Industriel Boul.
Laval, Quebec, Canada H7L 6V3
Contact: jmartin@multiquip.com

Tel. (450) 625-2244
Fax (450) 625-8664

BRAZIL

MULTIQUIP

Av. Evandro Lins e Silva, 840 - grupo 505
Barra de Tijuca - Rio de Janeiro
RJ CEP 22631-470
Contact: cnavarro@multiquip.com.br, srentes@multiquip.com.br

Tel. 011-55-21-3433-9055
Fax 011-55-21-3433-9055

Visit our website at: www.multiquip.com

MULTIQUIP

Atlanta • Boise • Newark •
Montreal, Canada • Manchester, UK
Rio De Janiero, BR • Puebla, MX

MULTIQUIP (UK)
HANOVER MILL
FITZROY STREET
ASHTON-UNDER-LYNE
LANCASHIRE, OL7 OTL
UNITED KINGDOM
PH. 0161-339-2223
FAX. 0161-339-3226
E-MAIL: mq@multiquip.com
www.multiquip.com