GLOBUG SOLO LIGHTING SYSTEM — WIRING DIAGRAM (S/N G20070 & BELOW)

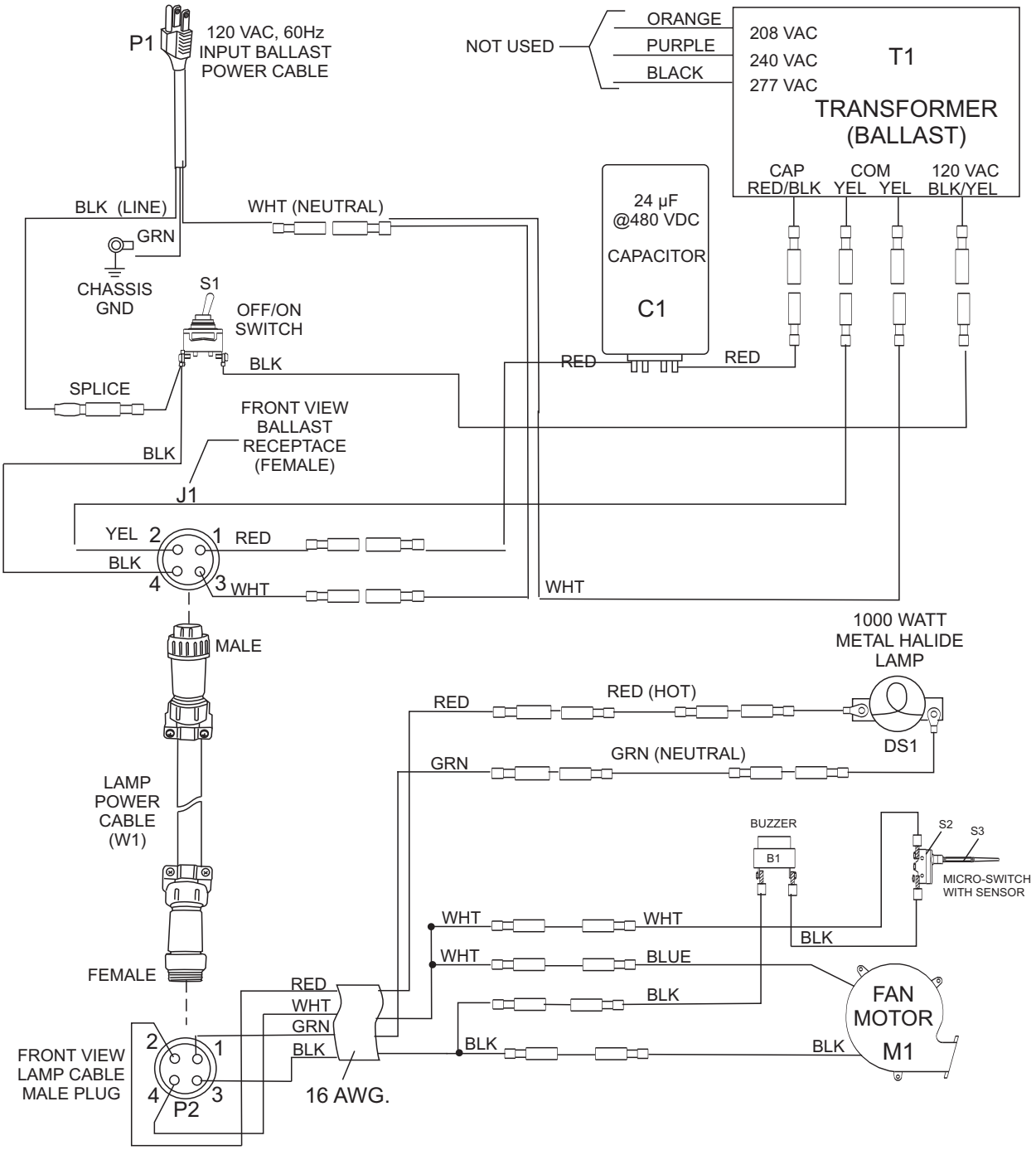

TABLE 6. REFERENCE DESIGNATIONS					
REF. DESC.	DESCRIPTION	PART NUMBER	REF. DESC.	DESCRIPTION	PART NUMBER
P1	Input Power Cable Assy.(Ballast)	A300066700	M1	Fan Motor Assy.	A300033500
J1	Ballast Output Receptacle	A400037600	B1	Buzzer Alarm Balloon	E000030100
P2	Lamp Fan Cable Assy. (Input)	A300033600	S1	ON/OFF Switch	A400037502
DS1	1000 Watt Metal Halide Lamp	E000009800	S2	Micro-Switch	1400150210
C1	24 µF Capacitor @ 480 VDC	19598	S3	Micro-Switch Cap	1400150410
T1	Ballast (Transformer)	A300033800	W1	Lamp Power Cable	A300083800