PARTS MANUAL

MULTIQUIP®

GloBug SERIES

GB3LEDC

LIGHTING SYSTEM

SERIAL NO. G4400001 AND ABOVE

Revision #2 (10/12/21)

TÜVRheinland

c

To find the latest revision of this publication or associated operation manual, visit our website at: www.multiquip.com

THIS MANUAL MUST ACCOMPANY THE EQUIPMENT AT ALL TIMES.

GB3LEDC LIGHTING SYSTEM

Explanation Of Code In Remarks Column..... 4
Suggested Spare Parts 5

Component Drawings

Nameplate And Decals..... 6–7
Electrical Assembly 8–11
Frame 1 Assembly..... 12–13
Frame 2 Assembly..... 14–15
Mast Assembly 16–17

NOTICE

Specifications and part numbers are subject to change without notice.

NOTES

EXPLANATION OF CODE IN REMARKS COLUMN

The following section explains the different symbols and remarks used in the Parts section of this manual. Use the help numbers found on the back page of the manual if there are any questions.

NOTICE

The contents and part numbers listed in the parts section are subject to change **without notice**. Multiquip does not guarantee the availability of the parts listed.

SAMPLE PARTS LIST

NO.	PART NO.	PART NAME	QTY.	REMARKS
1	12345	BOLT	1	INCLUDES ITEMS W/%
2%		WASHER, 1/4 IN		NOT SOLD SEPARATELY
2%	12347	WASHER, 3/8 IN	1	MQ-45T ONLY
3	12348	HOSE	A/R	MAKE LOCALLY
4	12349	BEARING	1	S/N 2345B AND ABOVE

NO. Column

Unique Symbols — All items with same unique symbol

(@, #, +, %, or >) in the number column belong to the same assembly or kit, which is indicated by a note in the "Remarks" column.

Duplicate Item Numbers — Duplicate numbers indicate multiple part numbers, which are in effect for the same general item, such as different size saw blade guards in use or a part that has been updated on newer versions of the same machine.

NOTICE

When ordering a part that has more than one item number listed, check the remarks column for help in determining the proper part to order.

PART NO. Column

Numbers Used — Part numbers can be indicated by a number, a blank entry, or TBD.

TBD (To Be Determined) is generally used to show a part that has not been assigned a formal part number at the time of publication.

A blank entry generally indicates that the item is not sold separately or is not sold by Multiquip. Other entries will be clarified in the "Remarks" Column.

QTY. Column

Numbers Used — Item quantity can be indicated by a number, a blank entry, or A/R.

A/R (As Required) is generally used for hoses or other parts that are sold in bulk and cut to length.

A blank entry generally indicates that the item is not sold separately. Other entries will be clarified in the "Remarks" Column.

REMARKS Column

Some of the most common notes found in the "Remarks" Column are listed below. Other additional notes needed to describe the item can also be shown.

Assembly/Kit — All items on the parts list with the same unique symbol will be included when this item is purchased.

Indicated by:

"INCLUDES ITEMS W/(unique symbol)"

Serial Number Break — Used to list an effective serial number range where a particular part is used.

Indicated by:

"S/N XXXXX AND BELOW"
"S/N XXXX AND ABOVE"
"S/N XXXX TO S/N XXX"

Specific Model Number Use — Indicates that the part is used only with the specific model number or model number variant listed. It can also be used to show a part is NOT used on a specific model or model number variant.

Indicated by:

"XXXXX ONLY"
"NOT USED ON XXXX"

"Make/Obtain Locally" — Indicates that the part can be purchased at any hardware shop or made out of available items. Examples include battery cables, shims, and certain washers and nuts.

"Not Sold Separately" — Indicates that an item cannot be purchased as a separate item and is either part of an assembly/kit that can be purchased, or is not available for sale through Multiquip.

GB3LEDC GLOBUG LIGHTING SYSTEM

1 TO 3 UNITS

Qty.	P/N	Description
3	A300260402	LED HEATSINK ASSY
2	E000076400	BALLOON CLOTH

NOTICE

Part numbers on this Suggested Spare Parts list may supersede/replace the part numbers shown in the following parts lists.

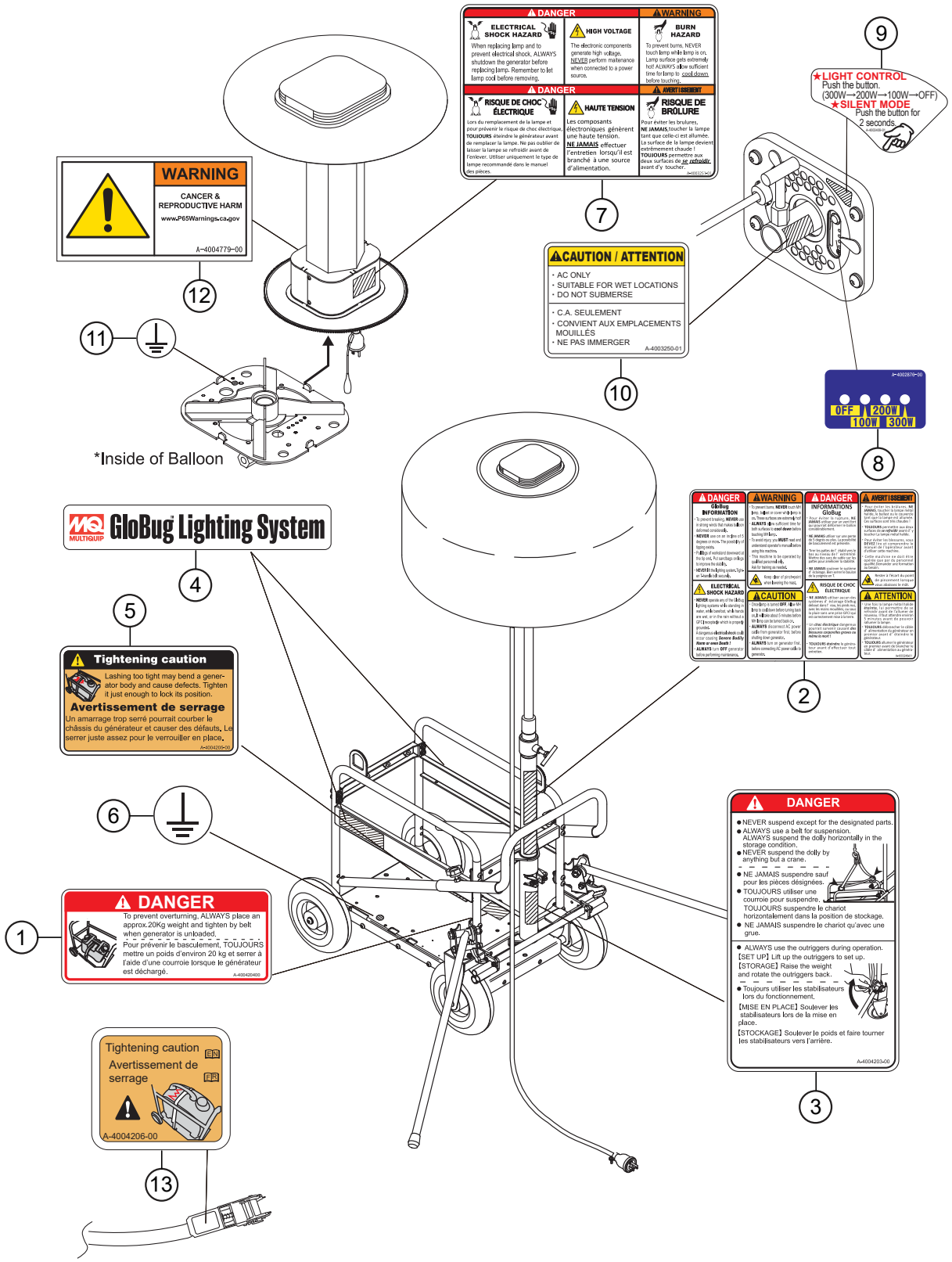
WARNING
CANCER & REPRODUCTIVE HARM
www.P65Warnings.ca.gov
A-4004779-00
12
11
*Inside of Balloon
DANGER
ELECTRICAL SHOCK HAZARD
When replacing lamp and to prevent electrical shock, ALWAYS shutdown the generator before replacing lamp. Remember to let lamp cool before removing.
HIGH VOLTAGE
The electronic components generate high voltage. NEVER perform maintenance when connected to a power source.
WARNING
BURN HAZARD
To prevent burns, NEVER touch lamp while lamp is on. Lamp surface gets extremely hot! ALWAYS allow sufficient time for lamp to cool down before touching.
DANGER
RISQUE DE CHOC ÉLECTRIQUE
Lors du remplacement de la lampe et pour prévenir le risque de choc électrique, TOUJOURS éteindre le générateur avant de remplacer la lampe. Ne pas oublier de laisser la lampe se refroidir avant de l'enlever. Utiliser uniquement le type de lampe recommandé dans le manuel des pièces.
HAUTE TENSION
Les composants électroniques génèrent une haute tension. NE JAMAIS effectuer l'entretien lorsqu'il est branché à une source d'alimentation.
AVERTISSEMENT
RISQUE DE BRÛLURE
Pour éviter les brulures, NE JAMAIS toucher la lampe tant que celle-ci est allumée. La surface de la lampe devient extrêmement chaude ! TOUJOURS permettre aux deux surfaces de se refroidir avant d'y toucher.
7
9
★LIGHT CONTROL
Push the button.
(300W→200W→100W→OFF)
★SILENT MODE
Push the button for 2 seconds
CAUTION / ATTENTION
• AC ONLY
• SUITABLE FOR WET LOCATIONS
• DO NOT SUBMERSE
• C.A. SEULEMENT
• CONVIENT AUX EMPLACEMENTS MOUILLÉS
• NE PAS IMMERGER
A-4003250-01
10
OFF
200W
100W
300W
8
GloBug Lighting System
4
5
Tightening caution
Lashing too tight may bend a generator body and cause defects. Tighten it just enough to lock its position.
Avertissement de serrage
Un amarrage trop serré pourrait courber le châssis du générateur et causer des défauts. Le serrer juste assez pour le verrouiller en place.
A-4004205-00
6
DANGER
To prevent overturning. ALWAYS place an approx.20Kg weight and tighten by belt when generator is unloaded.
Pour prévenir le basculement, TOUJOURS mettre un poids d'environ 20 kg et serrer a l'aide d'une courroie lorsque le générateur est déchargé.
A-4004204-00
1
Tightening caution EN
Avertissement de serrage FR
A-4004206-00
13
DANGER
2
DANGER
● NEVER suspend except for the designated parts.
● ALWAYS use a belt for suspension. ALWAYS suspend the dolly horizontally in the storage condition.
● NEVER suspend the dolly by anything but a crane.
● NE JAMAIS suspendre sauf pour les pièces désignées.
● TOUJOURS utiliser une courroie pour suspendre. TOUJOURS suspendre le chariot horizontalement dans la position de stockage.
● NE JAMAIS suspendre le chariot qu'avec une grue.
● ALWAYS use the outriggers during operation.
【SET UP】Lift up the outriggers to set up.
【STORAGE】Raise the weight and rotate the outriggers back.
● Toujours utiliser les stabilisateurs lors du fonctionnement.
【MISE EN PLACE】Soulever les stabilisateurs lors de la mise en place.
【STOCKAGE】Soulever le poids et faire tourner les stabilisateurs vers l'arrière.
A-4004203-00
3

NO.	PART NO.	PART NAME	QTY.	REMARKS
1	A400420400	DECAL; WEIGHT	1	
2	A400324801	DECAL; GLOBUG INFORMATION	1	
3	A400420300	DECAL; DANGER	1	
4	A400194900	DECAL; GB3LEDC GLOBUG	2	
5	A400420500	DECAL; TIGHTENING CAUTION	1	
6	A400457300	DECAL; EARTH/GROUND	1	
7	A400325101	DECAL; ELECTRIC SHOCK, HIGH VOLTAGE, BURN HAZ.	1	
8	A400287600	DECAL; DIMMER SWITCH LEDS	1	
9	A400340901	DECAL; SWITCH	1	
10	A400325001	DECAL; CAUTION: BALLOON INFORMATION	1	
11	A400372800	DECAL; EARTH/GROUND	1	
12	A400477900	DECAL; WARNING: CALIFORNIA-P65	1	
13	A400420600	DECAL; CAUTION: LATCHING BELT	1	

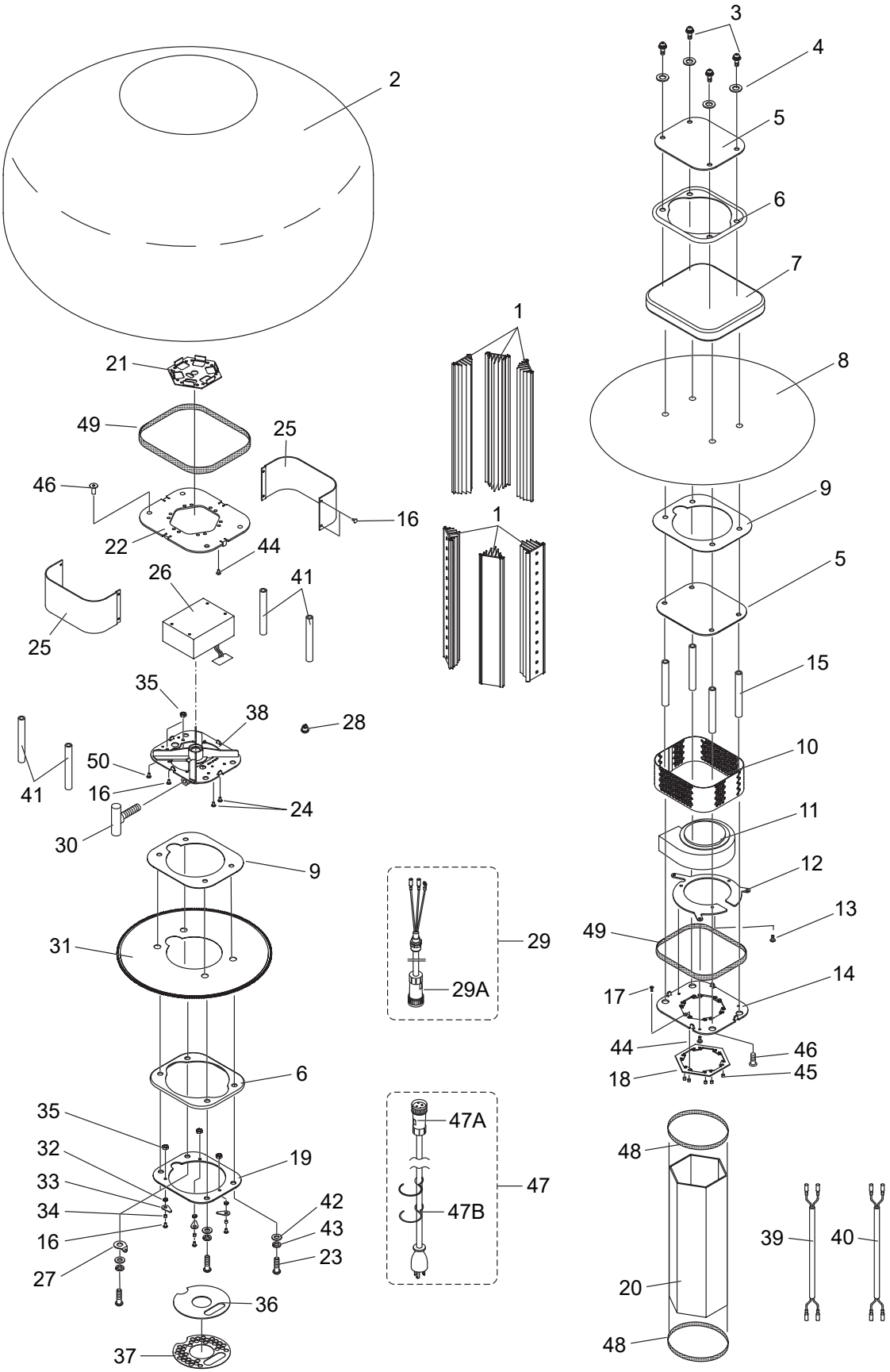
2
21
49
25
46
16
22
44
26
41
25
1
1
35
38
28
50
16
24
41
30
9
31
6
35
32
33
34
16
27
19
42
43
23
36
37
29
29A
47A
47
47B
3
4
5
6
7
8
9
5
15
10
11
12
13
49
14
17
44
46
18
45
48
20
48
39
40

NO.	PART NO.	PART NAME	QTY.	REMARKS
1	A300260402	LED HEATSINK ASSY.	6	
2	A100104800	BALLOON CLOTH COMPLETE	1	
3	0014708025	BUTTON SCREW, M8X25	4	
4	E000132100	SUS. OPG. BONDED WASHER	4	
5	A300257000	PLATE, TOP	2	
6	A300162401	SEAL, PACKING	2	
7	A100106102	BALLOON COVER, BLACK-LED COMP.	1	
8	A300160302	SHEET, TOP COMPLETE	1	
9	2214500230	SEAL, FLAT	2	
10	A300238101	BEZEL, TOP	1	
11	A300280601	FAN MOTOR ASSY.	1	
12	A300281401	PLATE, FAN	1	
13	0023204006	COUNTERSUNK SCREW, M4X6	3	
14	A300247701	PLATE, LAMP TOP	1	
15	A400299600	SPACER, TOP	4	
16	0024304008	SCREW, M4X8	12	
17	0025004012	COUNTERSUNK SCREW, M4X12	12	
18	A400295300	STOPPER, GUARD	1	
19	A300256700	PLATE, BOTTOM	1	
20	A300243602	GUARD	1	
21	A300260101	ADAPTER BOARD COMPLETE	1	
22	A300249801	PLATE, LAMP	1	
23	0014708035	BUTTON SCREW, M8X35	4	
24	0023203005	COUNTERSUNK SCREW, M3X5	2	
25	A300180600	BEZEL 2	2	
26	A000064704	LED POWER SUPPLY COMPLETE	1	
27	2204510110	WASHER	2	S/N G4400073 AND ABOVE
28	A400329900	DIMMING SWITCH COMPLETE	1	
29	A300315800	POWER CABLE COMPLETE (US)	1	INCLUDES ITEMS W/#
29A#	E000116200	CONNECTOR	1	
30	A400209802	KNOB	1	
31	A300148201	SHEET, BOTTOM	1	
32	E000119300	WASHER, M4	3	
33	A400030700	STOPPER, FILTER	3	
34	E000077500	SPACER	3	
35	0033104000	NUT, M4	5	
36	A400273800	FILTER	1	
37	A300244600	PLATE, AIR	1	
38	A200087400	FLANGE COMPLETE, LED	1	
39	A400305001	WIRE, FAN, COMPLETE	1	
40	A400331100	WIRE, FAN-VC, COMPLETE	1	

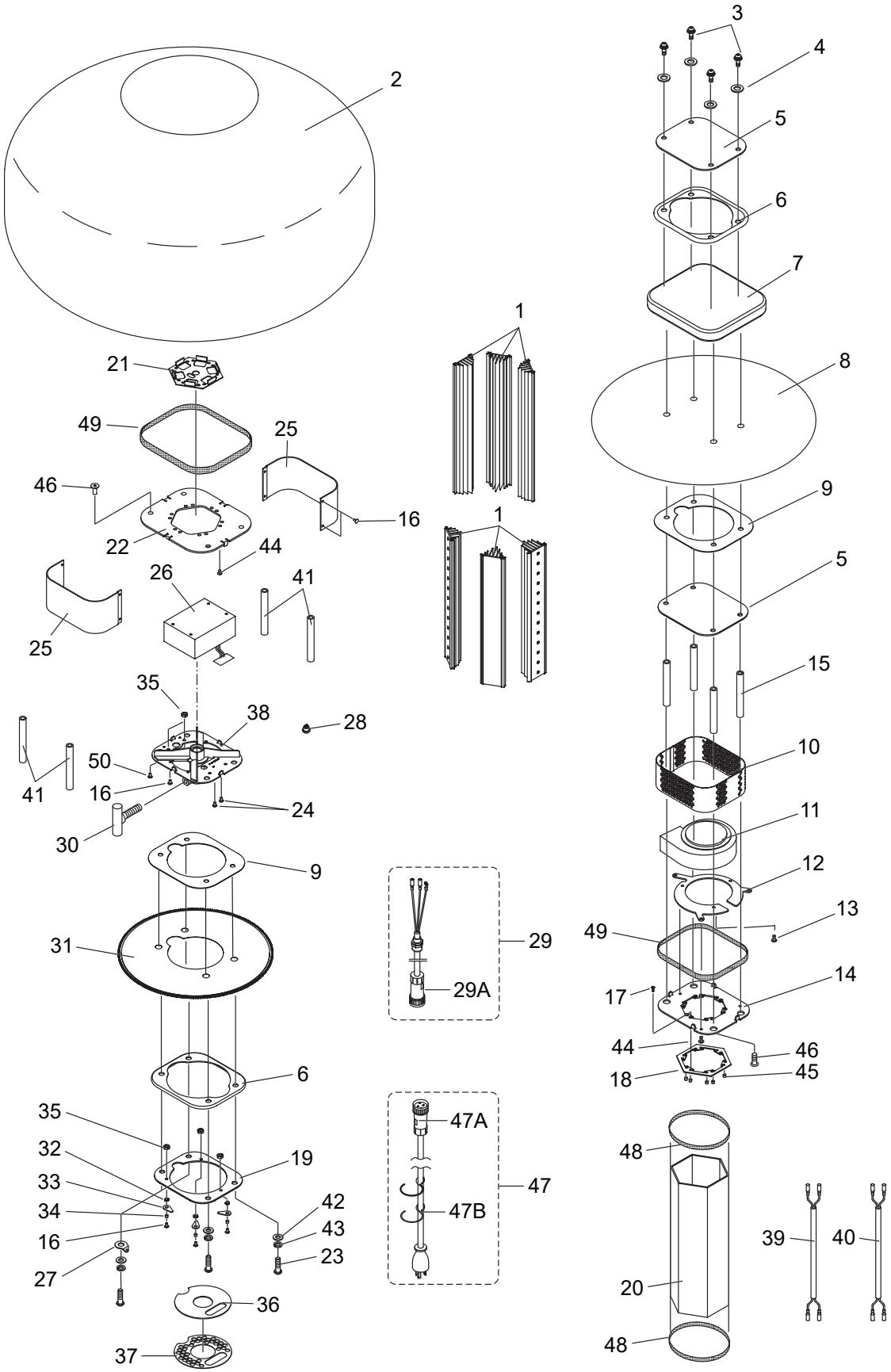
2
21
49
25
46
16
22
44
26
41
25
35
38
28
50
16
24
41
30
9
31
6
35
32
33
34
16
27
19
42
43
23
36
37
1
1
29
29A
47A
47
47B
3
4
5
6
7
8
9
5
15
10
11
12
13
49
14
17
44
46
18
45
48
20
48
39
40

NO.	PART NO.	PART NAME	QTY.	REMARKS
41	A400281700	SPACER, BOTTOM	4	
42	0043108000	WASHER, FLAT, M8	4	
43	030208200	WASHER, LOCK, M8	4	REPLACES 0043208000
44	0023004015	SCREW AND WASHER, M4X15	15	
45	E000122300	SPACER	12	
46	E000119600	BOLT, M8X20	8	
47	A300315900	POWER CABLE COMPLETE (US)	1	INCLUDES ITEMS W/% S/N G4400072 AND BELOW
47	A300346900	POWER CABLE COMPLETE (US)	1	INCLUDES ITEMS W/$ S/N G4400073 AND ABOVE
47A%$	E000116300	CONNECTOR	1	
47B%$	E000028200	S-HOOK	2	
48	A400340701	PACKING, GUARD	2	
49	A300310600	PACKING, PLATE	2	
50	0022404008	TRUSSHEAD SCREW, M4X8	1	

FRAME 1 ASSY.

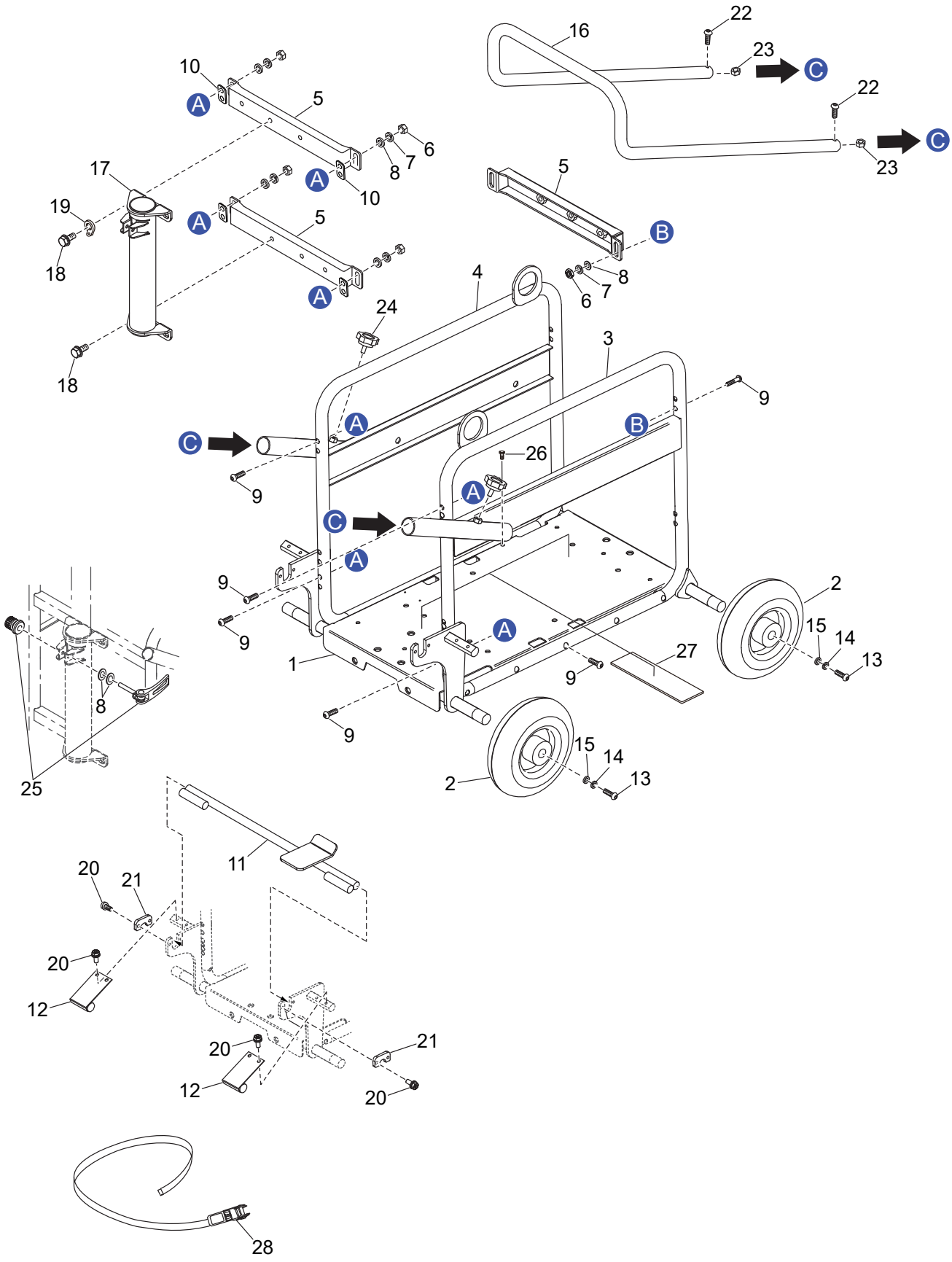

22
16
23
C
22
C
23
10
A
5
6
7
8
A
10
17
19
A
5
18
A
5
B
8
7
6
4
24
3
18
9
A
B
C
26
9
A
C
A
9
2
9
A
15
14
13
1
27
9
8
9
15
14
13
2
25
11
20
21
20
12
20
21
12
20
28

FRAME 1 ASSY.

NO.	PART NO.	PART NAME	QTY.	REMARKS
1	A200098701	BASE PLATE	1	S/N G4400072 AND BELOW
1	A200106601	BASE PLATE	1	S/N G4400073 AND ABOVE
2	E000073501	TIRE	4	S/N G4400072 AND BELOW
2	1002200100	TIRE	4	S/N G4400073 AND ABOVE
3	A200101900	FRAME LEFT COMPLETE	1	S/N G4400072 AND BELOW
3	A200151900	FRAME LEFT COMPLETE	1	S/N G4400073 AND ABOVE
4	A200101800	FRAME RIGHT COMPLETE	1	S/N G4400072 AND BELOW
4	A200152000	FRAME RIGHT COMPLETE	1	S/N G4400073 AND ABOVE
5	A200089105	SUBFRAME	3	S/N G4400072 AND BELOW
5	A200089106	SUBFRAME	3	S/N G4400073 AND ABOVE
6	0033108000	NUT, M8	12	
7	0043208000	WASHER, LOCK, M8	12	
8	0043108000	WASHER, M8	14	
9	0014706035	BOLT, M6X35	22	S/N G4400072 AND BELOW
9	0014708040	BOLT, M8X40	22	S/N G4400073 AND ABOVE
10	A400447200	WASHER, FRAME	4	S/N G4400073 AND ABOVE
11	A200066002	BRAKE SHAFT	1	S/N G4400072 AND BELOW
11	A200152400	BRAKE SHAFT	1	S/N G4400073 AND ABOVE
12	A400290100	PLATE, BRAKE	2	S/N G4400072 AND BELOW
12	A400452000	PLATE, BRAKE	2	S/N G4400073 AND ABOVE
13	0014710020	BOLT, M10X20	4	
14	0043210000	WASHER, LOCK M10	4	
15	0043110000	WASHER, M10	4	
16	A300278101	HANDLE	1	S/N G4400072 AND BELOW
16	A300278102	HANDLE	1	S/N G4400073 AND ABOVE
17	A200062701	PIPE, MAST	1	
18	0013510025	BOLT AND WASHER, M10X25	4	
19	2204510110	WASHER, CABLE HANGER	2	S/N G4400073 AND ABOVE
20	0023105008	SCREW, M5X8	4	S/N G4400072 AND BELOW
20	0015406012	BOLT AND WASHER, M6X12	8	S/N G4400073 AND ABOVE
21	A400443600	PLATE, STOPPER	2	S/N G4400073 AND ABOVE
22	0014906012	BOLT, M6X12	2	
23	0033206000	SELF LOCK NUT, M6	2	S/N G4400072 AND BELOW
23	0033206000	SELF LOCK NUT, M6	2	S/N G4400073 AND ABOVE
24	E000042602	KNOB BOLT	2	
25	2212780310	LEVER W/ NUT, CLAMP	1	
26	0013106010	BOLT, M6X10	1	S/N G4400072 AND BELOW
26	0013106008	BOLT, M6X8	1	S/N G4400073 AND ABOVE
27	A400106001	SPONGE	2	
28	E000097300	LATCHING BELT	1	

FRAME 2 ASSY.

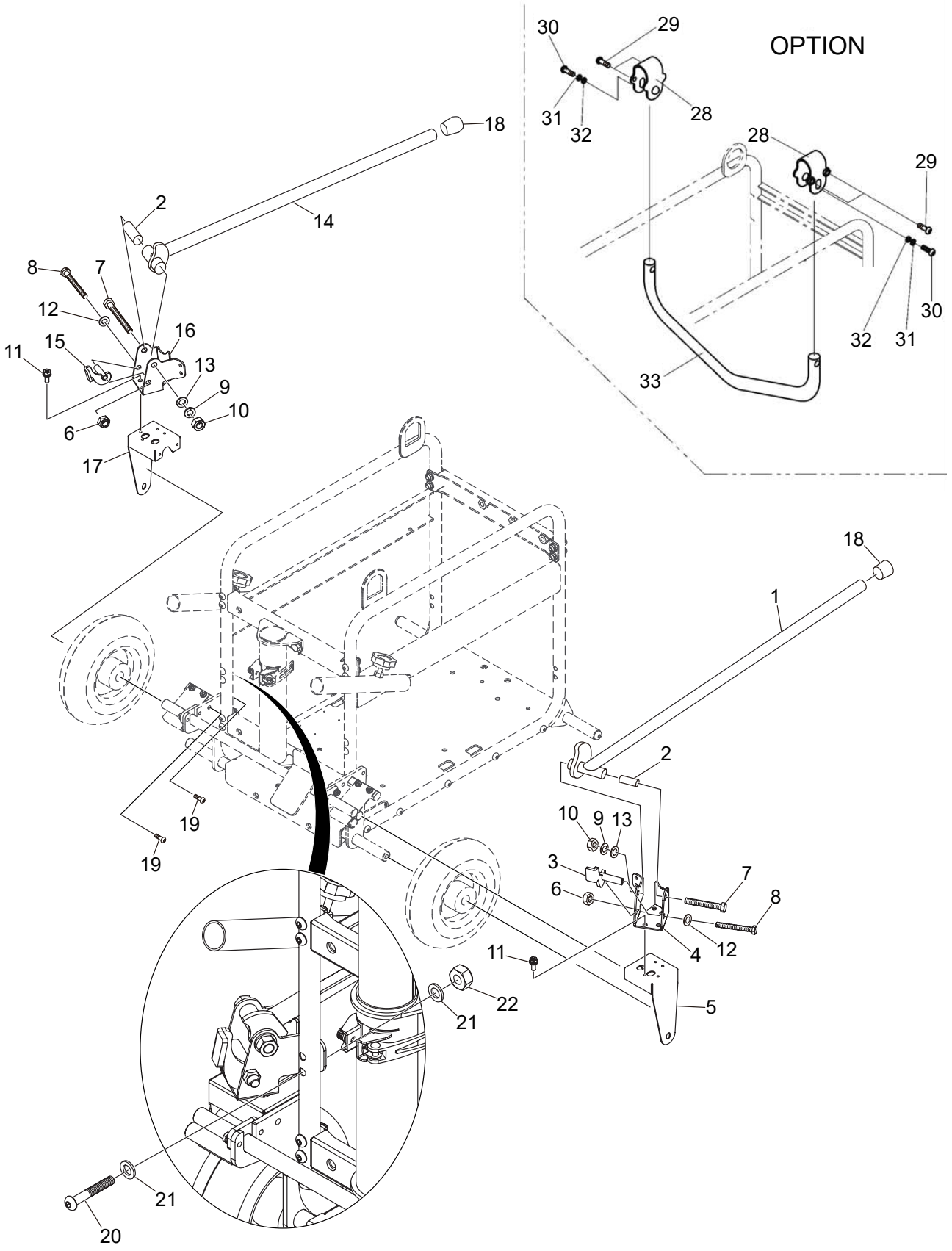
OPTION
30
29
31
32
28
28
29
30
32
31
33
18
14
2
8
7
12
16
15
11
13
9
10
6
17
18
1
2
10
9
13
3
6
7
8
4
12
11
5
22
21
19
19
21
20

NO.	PART NO.	PART NAME	QTY.	REMARKS
1	A300093702	OUTRIGGER RIGHT-SIDE	1	S/N G4400072 AND BELOW
1	A300395702	OUTRIGGER RIGHT-SIDE	1	S/N G4400073 AND ABOVE
2	A400116700	SPACER	2	S/N G4400072 AND BELOW
2	A400480100	SPACER	2	S/N G4400073 AND ABOVE
3	A300094003	WEIGHT, OUTRIGGER RIGHT-SIDE	1	S/N G4400072 AND BELOW
3	A300404201	WEIGHT, OUTRIGGER RIGH SIDE	1	S/N G4400073 AND ABOVE
4	A200036602	BRACKET, OUTRIGGER RIGHT-SIDE	1	S/N G4400072 AND BELOW
4	A200152101	BRACKET, OUTRIGGER RIGHT-SIDE	1	S/N G4400073 AND ABOVE
5	A200091301	BRACKET RIGHT-SIDE	1	S/N G4400072 AND BELOW
5	A200150100	BRACKET RIGHT-SIDE	1	S/N G4400073 AND ABOVE
6	0033210000	SELF LOCK NUT M10	2	
7	0013512075	BOLT AND WASHER, M12X75	2	S/N G4400072 AND BELOW
7	0013512085	BOLT AND WASHER, M12X85	2	S/N G4400073 AND ABOVE
8	0013210070	BOLT, M10X70	2	S/N G4400072 AND BELOW
8	0013210080	BOLT, M10X80	2	S/N G4400073 AND ABOVE
9	0043212000	WASHER, LOCK M12	2	
10	0033112000	NUT, M12	2	
11	0015106015	BOLT AND WASHER, M6X15	8	
12	0043110000	WASHER, M10	2	
13	0043112000	WASHER, M12	2	
14	A300093802	OUTRIGGER LEFT	1	S/N G4400072 AND BELOW
14	A300395802	OUTRIGGER LEFT	1	S/N G4400073 AND ABOVE
15	A300093903	WEIGHT, OUTRIGGER LEFT-SIDE	1	S/N G4400072 AND BELOW
15	A300404101	WEIGHT, OUTRIGGER LEFT-SIDE	1	S/N G4400073 AND ABOVE
16	A200036702	BRACKET, OUTRIGGER LEFT-SIDE	1	S/N G4400072 AND BELOW
16	A200152201	BRACKET, OUTRIGGER LEFT-SIDE	1	S/N G4400073 AND ABOVE
17	A200091201	BRACKET LEFT-SIDE	1	S/N G4400072 AND BELOW
17	A200150200	BRACKET LEFT-SIDE	1	S/N G4400073 AND ABOVE
18	E000148900	RUBBER, FOOT	2	S/N G4400072 AND BELOW
18	E000149500	RUBBER, FOOT	2	S/N G4400073 AND ABOVE
19	0014706035	BOLT, M6X35	2	S/N G4400072 AND BELOW
19	0014706015	BOLT, M6X15	2	S/N G4400072 AND BELOW
19	0014706015	BOLT, M6X15	4	S/N G4400073 AND ABOVE
20	0014706040	BOLT, M6X40	4	S/N G4400073 AND ABOVE
21	0043106000	WASHER, M10	8	S/N G4400073 AND ABOVE
22	0033206000	SELF LOCK NUT, M6	4	S/N G4400073 AND ABOVE
28	A300274400	BRACKET COMPLETE	2	
29	0014906025	BOLT, M6X25	4	
30	0015908035	TORX BOLT, M8X35	2	
31	0044308000	WASHER, LOCK M8	2	
32	0044208000	WASHER, M8	2	
33	A200099000	THEFT GUARD	1	

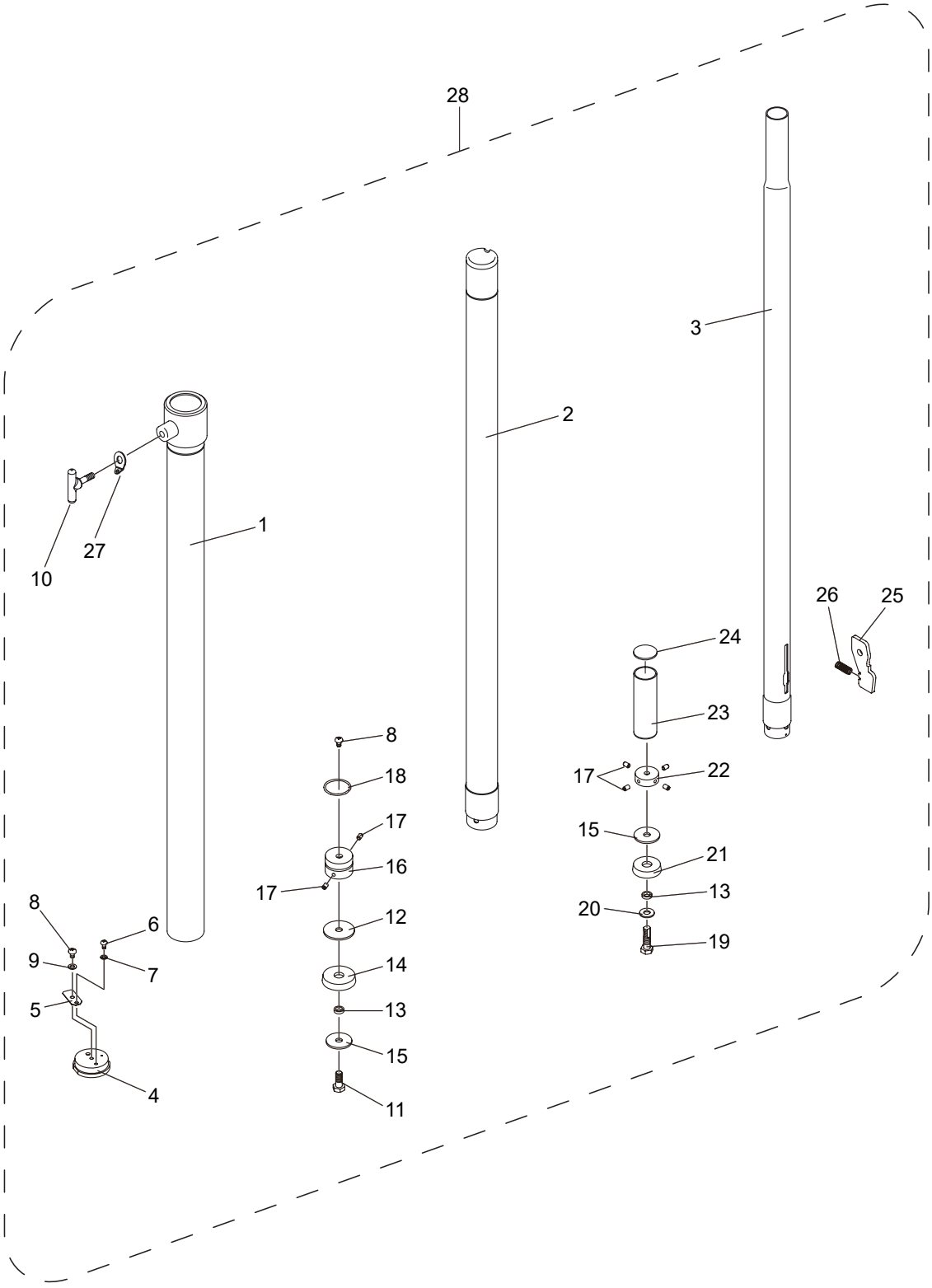
28
3
2
1
10
27
26
25
24
23
22
17
15
21
13
20
19
8
18
17
16
17
12
14
13
15
11
8
6
9
7
5
4

NO.	PART NO.	PART NAME	QTY.	REMARKS
1#	A300175400	FIRST MAST COMPLETE	1	
2#	A300175500	SECOND MAST COMPLETE	1	
3#	A300175600	THIRD MAST COMPLETE	1	
4#	A400199700	PLUG	1	
5#	A400112700	LEAF VALVE	1	
6#	0023104008	SCREW, M4X8	1	
7#	0041210000	WASHER, M4	1	REPLACES P/N 0043104000
8#	0023105008	SCREW, M5X8	2	
9#	0043105000	WASHER, M5	1	
10#	A400187602	KNOB, BLACK	1	
11#	0013108020	BOLT, M8X20	1	
12#	A400200500	WASHER	1	
13#	A400110200	WASHER, MAST 1	2	
14#	A400200700	RUBBER, MAST	1	
15#	A400092801	WASHER, SECOND MAST	2	
16#	A400200800	BOTTOM PLATE	1	
17#	0024705008	SET SCREW, M5X8	6	
18#	E000081200	O-RING	1	
19#	A400202700	BOLT	1	
20#	0043108000	WASHER, M8	1	
21#	A400109600	RUBBER, MAST 1	1	
22#	A400092402	BOTTOM PLATE 1	1	
23#	A400200300	PIPE, LEVER	1	
24#	A400321800	WASHER	1	
25#	A400200201	LEVER, HOOK	1	
26#	A400345900	SPRING, HOOK	1	
27#	2204510110	WASHER	1	
28	A000028700	3-PIECE MAST ASSY. COMPLETE	1	INCLUDES ITEMS W/ #

PARTS MANUAL

HERE'S HOW TO GET HELP

PLEASE HAVE THE MODEL AND SERIAL NUMBER ON-HAND WHEN CALLING

UNITED STATES

Multiquip Inc.

(310) 537- 3700
6141 Katella Avenue Suite 200
Cypress, CA 90630
E-MAIL: mq@multiquip.com
WEBSITE: www.multiquip.com

CANADA

Multiquip

(450) 625-2244
4110 Industriel Boul.
Laval, Quebec, Canada H7L 6V3
E-MAIL: infocanada@multiquip.com

UNITED KINGDOM

Multiquip (UK) Limited Head Office

0161 339 2223
Unit 2, Northpoint Industrial Estate,
Globe Lane,
Dukinfield, Cheshire SK16 4UJ
E-MAIL: sales@multiquip.co.uk

© COPYRIGHT 2021, MULTIQUIP INC.

Multiquip Inc, the MQ logo are registered trademarks of Multiquip Inc. and may not be used, reproduced, or altered without written permission. All other trademarks are the property of their respective owners and used with permission.

This manual MUST accompany the equipment at all times. This manual is considered a permanent part of the equipment and should remain with the unit if resold.

The information and specifications included in this publication were in effect at the time of approval for printing. Illustrations, descriptions, references and technical data contained in this manual are for guidance only and may not be considered as binding. Multiquip Inc. reserves the right to discontinue or change specifications, design or the information published in this publication at any time without notice and without incurring any obligations.

Your Local Dealer is:

MULTIQUIP®