OPERATION AND PARTS MANUAL

MULTIQUIP®

GloBug SERIES

GB8LED (Pentapod with Lamp)

SERIAL NO. G3800001 AND ABOVE

GB8LEDB (Lamp Only)

SERIAL NO. G3900001 AND ABOVE

Revision #2 (10/03/19)

TÜVRheinland

c

To find the latest revision of this publication, visit our website at:
www.multiquip.com

THIS MANUAL MUST ACCOMPANY THE EQUIPMENT AT ALL TIMES.

Certificate

TÜVRheinland®

Certificate no. CA 72150324 03

License Holder:
Light Boy Co., Ltd.
1-39-1 Yazaki-cho
Fuchu, Tokyo 183-0025
Japan

Manufacturing Plant:
LIGHT BOY FACTORY CO., LTD.
1-39-1 Yazaki-cho
Fuchu, Tokyo 183-0025
Japan

Test report no.: USA-SS 17044753 003 **Client Reference:** Satomi Kugimiya

Tested to: C22.2 NO. 12-1982+GI1+GI2+GI3+GI4+GI5 (R2013)
CAN/CSA-C22.2 NO. 250.13-14

Certified Product: Portable LED Worklights, GB8LED series **License Fee - Units**

Addition:
Model Designation: GB8LED, GB8LEDB, GBC8LED, GBS8LED
Rated Voltage: AC 120V, 60Hz
Rated Power: 820W

Appendix: 1, 1-3

Licensed Test mark:

TÜVRheinland
C

Date of Issue (day/mo/yr)
05/04/2016

TÜV Rheinland of North America, Inc., 12 Commerce Road, Newtown, CT 06470, Tel (203) 426-0888 Fax (203) 426-4009

GB8LED Lighting System

Table of Contents 3
Safety Information 4–7
Specifications 8
Dimensions 9
Illumination Range 10
General Information 11
Components 12–13
Setup 14–16
Operation 17–19
Maintenance 20–23
Wiring Diagram 24
Troubleshooting 25–28
Explanation of Code in Remarks Column 30
Suggested Spare Parts 31

Component Drawings

Nameplate and Decals 32–33
Electrical Assembly 34–35
Pentapod Assembly 36–37
Mast Assembly 38–39

Do not operate or service the equipment before reading the entire manual. Safety precautions should be followed at all times when operating this equipment. Failure to read and understand the safety messages and operating instructions could result in injury to yourself and others.

SAFETY MESSAGES

The four safety messages shown below will inform you about potential hazards that could injure you or others. The safety messages specifically address the level of exposure to the operator and are preceded by one of four words: **DANGER, WARNING, CAUTION** or **NOTICE.**

SAFETY SYMBOLS

DANGER

Indicates a hazardous situation which, if not avoided, **WILL** result in **DEATH** or **SERIOUS INJURY.**

WARNING

Indicates a hazardous situation which, if not avoided, **COULD** result in **DEATH** or **SERIOUS INJURY.**

CAUTION

Indicates a hazardous situation which, if not avoided, **COULD** result in **MINOR** or **MODERATE INJURY.**

NOTICE

Addresses practices not related to personal injury.

Potential hazards associated with the operation of this equipment will be referenced with hazard symbols which may appear throughout this manual in conjunction with safety messages.

Symbol	Safety Hazard
	Burn hazards
	Electric shock hazards

GENERAL SAFETY

⚠ CAUTION

- **NEVER** operate this equipment without proper protective clothing, shatterproof glasses, respiratory protection, hearing protection, steel-toed boots and other protective devices required by the job or city and state regulations.

- **NEVER** operate this equipment when not feeling well due to fatigue, illness or when under medication.

- **NEVER** operate this equipment under the influence of drugs or alcohol.

- **ALWAYS** check the equipment for loosened threads or bolts before starting.
- **DO NOT** use the equipment for any purpose other than its intended purposes or applications.

NOTICE

- This equipment should only be operated by trained and qualified personnel 18 years of age and older.
- Whenever necessary, replace nameplate, operation and safety decals when they become difficult read.
- Manufacturer does not assume responsibility for any accident due to equipment modifications. Unauthorized equipment modification will void all warranties.
- **NEVER** use accessories or attachments that are not recommended by Multiquip for this equipment. Damage to the equipment and/or injury to user may result.
- **ALWAYS** know the location of the nearest **fire extinguisher.**

- **ALWAYS** know the location of the nearest **first aid kit.**

- **ALWAYS** know the location of the nearest phone or **keep a phone on the job site.** Also, know the phone numbers of the nearest **ambulance, doctor** and **fire department.** This information will be invaluable in the case of an emergency.

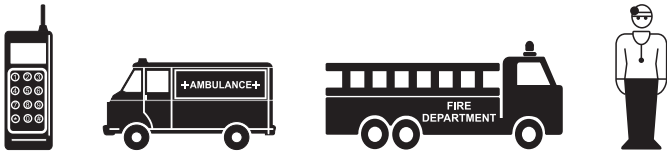

LIGHTING SYSTEM SAFETY

⚠ WARNING

- **NEVER** disconnect any **emergency or safety devices.** These devices are intended for operator safety. Disconnection of these devices can cause **severe injury, bodily harm or even death.** Disconnection of any of these devices will void all warranties.

⚠ CAUTION

- **NEVER** attempt service on a running machine.

NOTICE

- To prevent the lighting system from overturning, **NEVER** use in winds that exceed 25 mph (11 m/s).
- The lighting system should only be used in temperatures between 14° to 104°F (10° to 40° C). Failure to comply with these operating parameters could cause the lamp to malfunction and shorten the ballast life.
- **ALWAYS** keep the lighting system in proper running condition.
- Fix damage to lighting system and replace any broken parts immediately.
- **ALWAYS** store equipment properly when it is not being used. Equipment should be stored in a clean, dry location out of the reach of children and unauthorized personnel.

NOTICE

- **NEVER** leave any grease or oil residue on lamp surface when replacing or removing lamp. This can create hot spots, reducing the service life of the lamp.
- **ALWAYS** make sure lamp surface is clean and dry.
- **ALWAYS** replace with MQ recommended type lamp. See parts section of this manual.
- If applicable, **ALWAYS** make sure the lamp guard is installed correctly. **NEVER** deform the lamp guard.
- **NEVER** unplug the lamp's AC power cable during operation.
- **ALWAYS** have a **trained technician** to install and remove lamp or replace any damaged fixture wiring.

TRANSPORTING SAFETY

NOTICE

- When transporting the pentapod lighting system, if applicable, always place in **stow position** and place pentapod in its carrying case.
- **ALWAYS** remove balloon/lamp assembly from the mast when transporting lighting system. This will prevent damage to the bulb due to vibration.
- **NEVER** leave the balloon/lamp exposed during transport. Exposure to excess wind or rain could damage the balloon's nylon cover.
- **ALWAYS** place balloon inside its protective cover during transport. Be sure the cover is secured tightly around the balloon/lamp assembly.

BALLOON SAFETY

⚠ CAUTION

- **ALWAYS** keep the balloon away from sharp objects and excessive amounts of heat.

NOTICE

- To prevent balloon deformation, **NEVER** use lighting system in strong winds.
- **DO NOT** place the balloon inside its protective cover until the lamp has had a sufficient amount of time to cool down. This will prevent the balloon's nylon cover from being burned (touching the lamp surface).
- **ALWAYS** place the balloon inside its protective cover after each use. This will prolong the life of the balloon material, keeping it protected from harsh environmental elements.
- Replace balloon immediately if damaged. A damaged balloon will not inflate properly, and may become more damaged by touching the hot lamp surface.
- **DO NOT** use excessive force when zipping and unzipping the balloon. Be gentle with the zipper mechanism. If the zipper is broken, the balloon will become unusable.

MAST SAFETY

⚠ CAUTION

- When raising or lowering the mast, keep hands and fingers clear of the various mast sections, this will prevent hands and fingers from getting pinched.

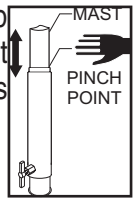

- **NEVER** attach anything to the mast.
- **ALWAYS** lower the mast when not in use, or if high winds or electrical storms are expected in the area.

ELECTRICAL SAFETY

⚠ DANGER

- Lighting system is equipped with a ground pin on the power plug. For your protection, **ALWAYS** complete the grounding path. **NEVER** insert the AC power plug into a 2-prong receptacle to operate lighting system.

  When applying power to the lighting system, **ALWAYS** connect the AC power plug to a 3-prong receptacle that is grounded. The possibility exists of **electrical shock, electrocution and even death** if the lighting system is not grounded.

- **NEVER** operate lighting system or handle any electrical equipment while standing in water, while barefoot, while hands are wet or in the rain. A dangerous **electrical shock** could occur, causing **severe bodily harm or even death.**

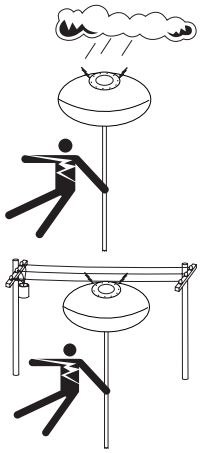

- **ALWAYS** make sure the area above the lighting system is open and clear of overhead power lines and other obstructions. Contact with overhead power lines or other obstructions could result in equipment damage, **electrical shock, electrocution and even death.**

Power Cord/Cable Safety

⚠ DANGER

- **NEVER** let power cords or cables **lay in water.**
- **NEVER** use **damaged** or **worn** cables or cords. Inspect for cuts in the insulation
- **NEVER** grab or touch a live power cord or cable with wet hands. The possibility exists of **electrical shock, electrocution or death.**

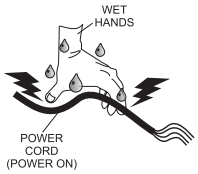

- Make sure power cables are securely connected. Incorrect connections may cause **electrical shock** and damage to the lighting system.

NOTICE

- **ALWAYS** make certain that proper power or extension cord has been selected for the job. See Cable Selection Chart in this manual.

Table 1. Specifications		
Globug Lighting System		
Model		GB8LED
Input Voltage		120 VAC
Frequency		50 Hz/ 60 Hz
Max. Current		6.9 Amps (120V @800 W)
Weight	Lamp Fixture	24.70 lb (11.2 kg)
	Mast	4.85 lb (2.2 kg)
	Pentapod	18.70 lb (8.5 kg)
	Storage Case	1.54 lb (0.7 kg)
	Cable	1.54 lb (0.7 kg)
	Total	51.33 lb (23.3 kg)
Appropriate Generator		850 W and above
Lamp		
Lamp Type		LED
Dimming Control		3 stages: 800W / 600W / 400W
Total Luminous Flux (lm)		110000 ±7% @800W
		68000 ±7% @600W
		53000 ±7% @400W
Operation_Enabled Temperature Range		14 to 104°F (-10 to 40 °C)
Mast		
Number of Stages		3 (with gas assist)
Maximum Height (Standard)		11.25 feet (3.42 meters)

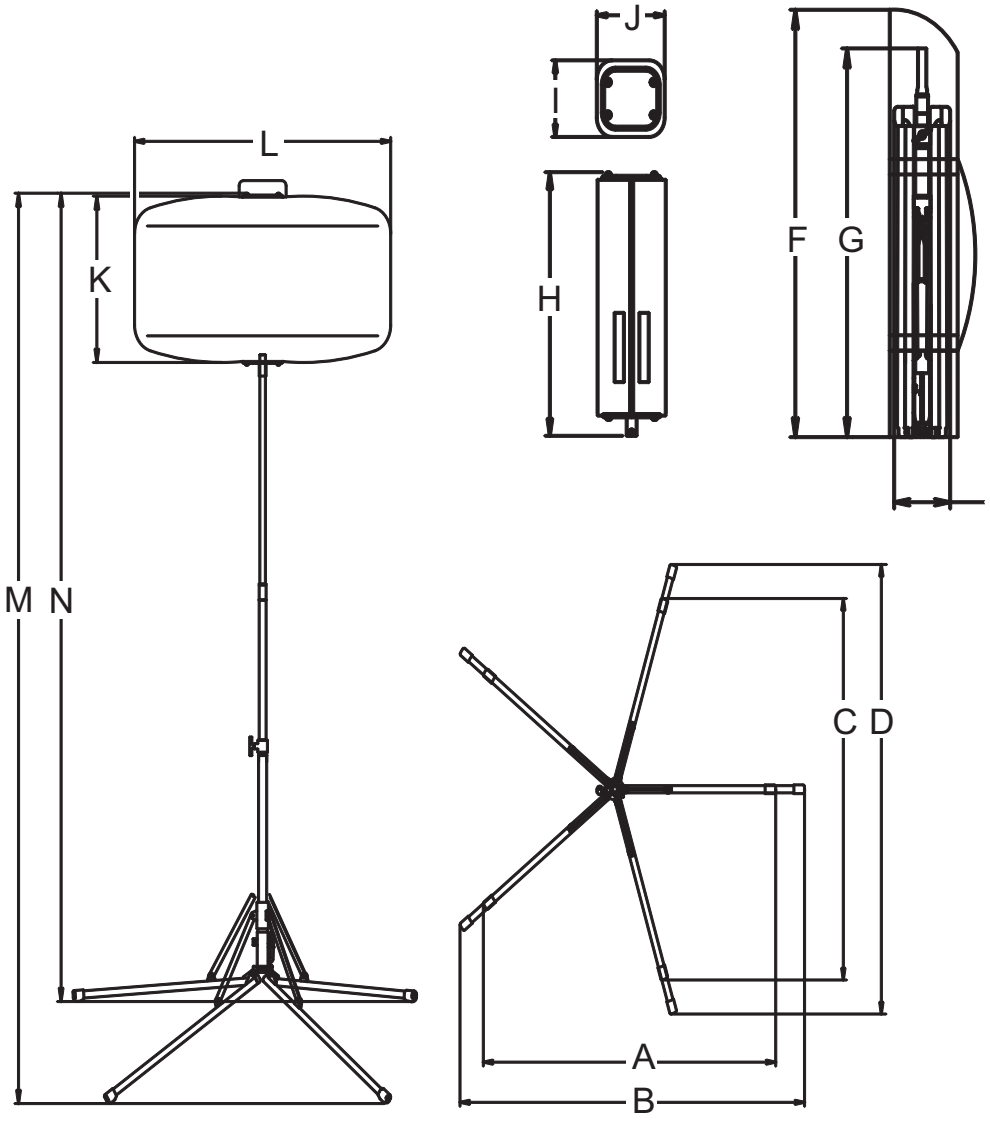

Figure 1. Dimensions (GB8LED)

Table 2. Dimensions			
Reference Letter	**Dimension in. (mm.)**	**Reference Letter**	**Dimension in. (mm.)**
A	Upper Position - 54.0 (1,372)	H	27.0 (690)
B	Lower Position - 64.0 (1,615)	I	8.0 (200)
C	Upper Position - 57.0 (1,440)	J	9.0 (220)
D	Lower Position - 67.0 (1,700)	K	25.0 (650)
E	7.5 (190)	L	47 in. (1200)
F	44.1 (1,120)	M	82.9 - 135.2 in. (2106 - 3435)
G	40.0 (1,016)	N	68 - 120 in. (1727 - 3048)

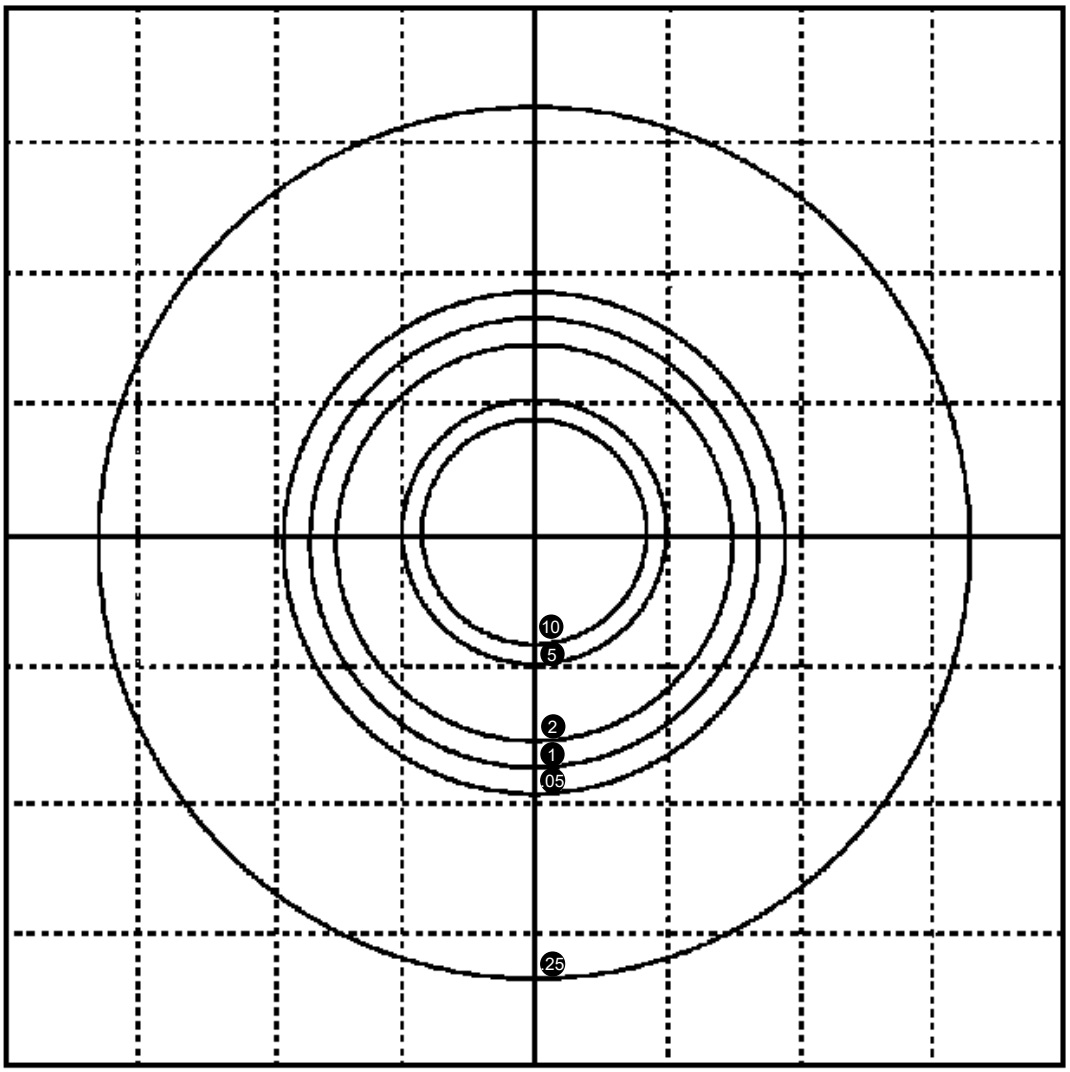

1 Grid = 20 ft. (6 meters)

Illuminance (Footcandle)	10	5	2	1	0.5	0.25
Diameter Ft. (Meters)	34 (10)	40 (12)	60 (18)	68 (21)	76 (23)	132 (40)

Figure 2. Illumination Range (Foot Candles)

The Multiquip GloBug GB8LED is a general purpose, portable, glare-free lighting systems Typical applications for these types of lighting systems include construction sites, emergency road crews and backyard parties.

LIGHTING

This GloBug lighting system is comprised of LED lamps in a shock-resistant, waterproof LED assembly. The LED assembly has an output of 110,000 lumens @800W. The LEDs have a long operating life of up to 40,000 hours. The lighting system has a 3-stage dimming control (400W, 600W and 800W).

SETUP

The GB8LED lighting system can be set up quickly and easily. Pentapod legs can be deployed in one quick easy step and can be adjusted to two different heights.

In addition the unit is equipped with a gas-assist mast lowering system. This system allows the mast to be retracted slowly so that the mast will not fall rapidly when released. This feature reduces the amount of vibration or shock to the lamp.

TRANSPORT

The GB8LED lighting system can be transported (Figure 3) quite easily in two carrying cases.

For ease of service or transport, the lamp assembly is equipped with a quick-disconnect connector that allows the lamp fixture to be removed quickly. This feature is extremely useful during transport of the lighting system. It is always best to remove the lamp and pack it safely so it will not be damaged.

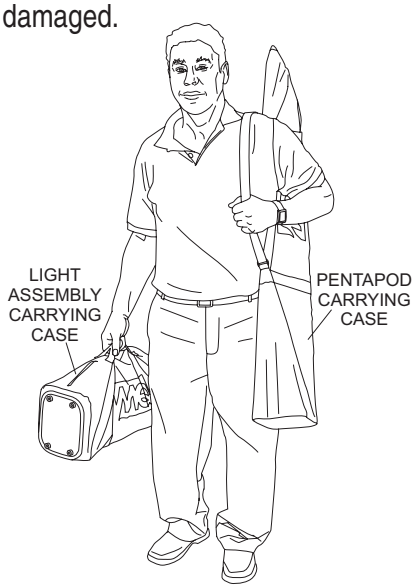

Figure 3. GB8LED Transporting

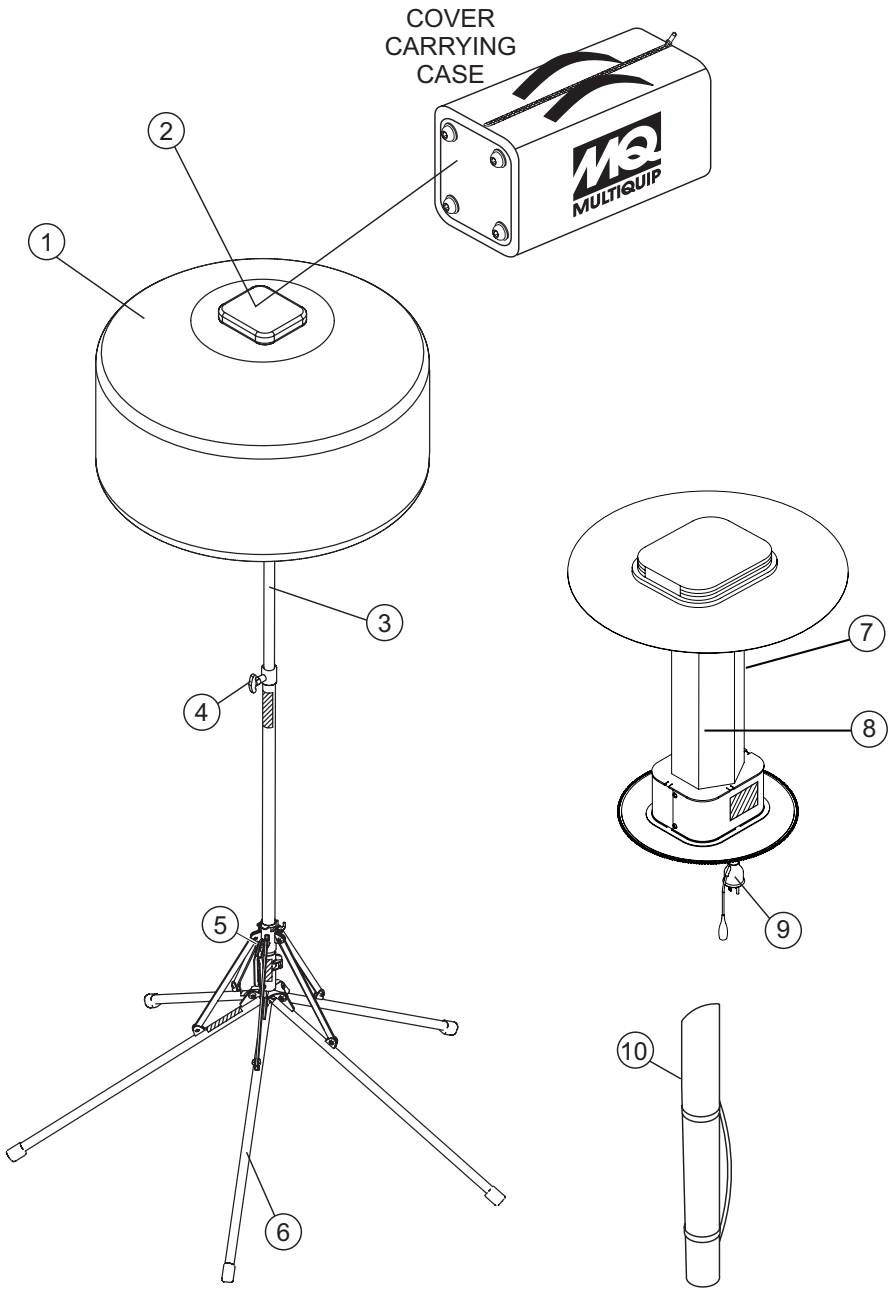

Figure 4. Major Components

Figure 4 shows the location of the components for the GB8LED lighting system. The function of each component is described below:

1. **Balloon** — This balloon is made of heat-resistant polyester, with a diameter of 43 inches (1092 mm).
2. **Balloon Cover/Carrying Case** — When zipped, this protective cover acts like a carrying case. The complete lamp assembly is enclosed within the cover-carrying case. Allow a sufficient amount of time for the lamp to cool down before covering balloon. The possibility exists of the balloon getting burned.
3. **Mast** — Three stage gas-assist mast. Maximum mast height is 11.25 ft. (3.42 meters). When raising the mast, always be on the lookout for overhead obstructions.
4. **T-Handle Bolt Lock** — Always tighten this lock to hold the lamp/balloon securely in place before raising mast.
5. **Weight Support Hook** — To add additional weight to the tripod and make the tripod more stable in windy conditions. Place a sandbag or similar weight onto this hook.
6. **Pentapod** — Unbuckle velcro strap securing pentapod legs (5), push down on any leg until all legs are fully deployed. To place legs in the stowed position, pull upward on velcro strap while pushing down on pentapod pole. Pull all legs upward and secure with velcro strap.
7. **Lamp Guard** — This guard (cage) protects the lamp from being hit by objects.
8. **Lamp** — Comprised of LED lamps. The lamps have three stages of brightness: 800W, 600W, and 400W.
9. **AC Power Cable** — Connect this cable to a 120 VAC, 60 Hz power source.
10. **Pentapod Carrying Case** — Use this case when transporting of the tripod is required. **ALWAYS** store tripod in this carrying case when not in use.

PENTAPOD DEPLOYMENT

1. Place the pentapod on a firm level surface so that it will not slide or turn over. Make sure there is enough space around the unit for the tripod legs to be deployed.
2. Remove pentapod from its carrying case. The pentapod legs are secured by a black velcro strap (Figure 5). Squeeze both tabs on each side of buckle to unlock strap and allow tripod legs (Figure 6) to be deployed.

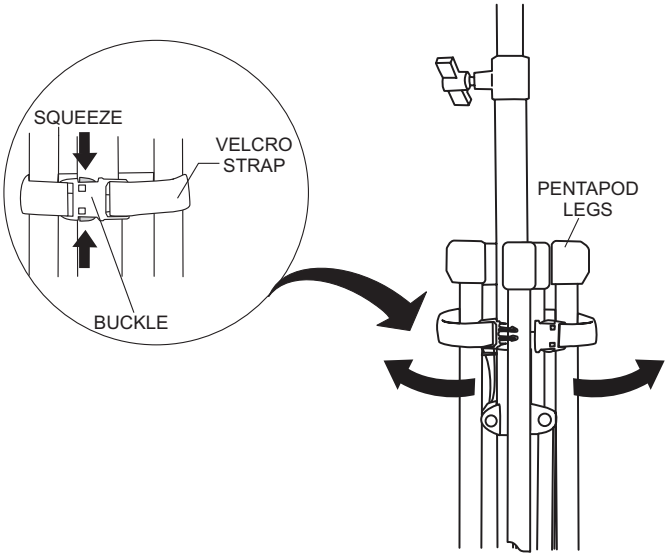

Figure 5. Velcro Strap (Open)

⚠ CAUTION

When storing and folding the mast **ALWAYS** keep hands and fingers away from pinch points.

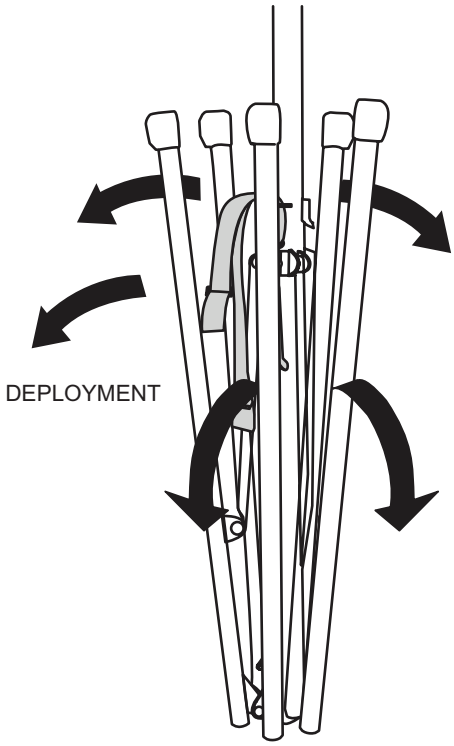

Figure 6. Pentapod Deployment

3. Next, pull upward on the mast and let the tripod legs deploy. Once the tripod legs have been fully deployed make sure the legs are locked by securing the latch.

   The latch (Figure 7) has two positions, upper and lower. Placing the latch in the upper position will provide 1 ft. (305 mm) more height.

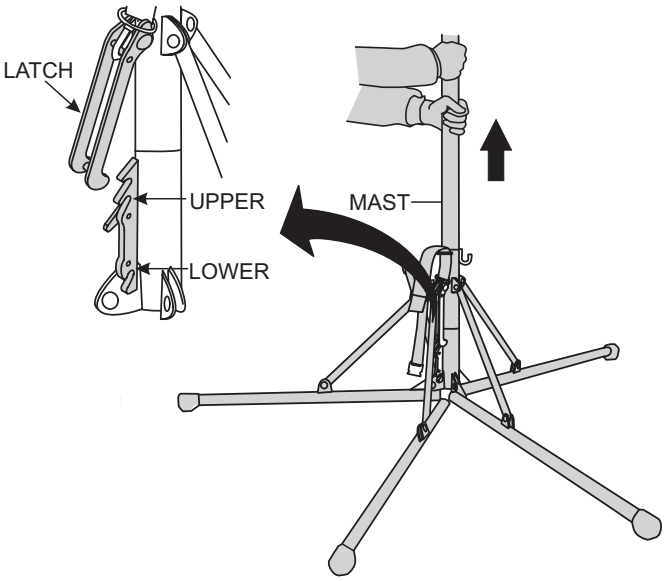

Figure 7. Securing the Tripod

BALLOON ASSEMBLY PLACEMENT

1. Place balloon assembly (Figure 8) onto mast and tighten Upper T-handle.

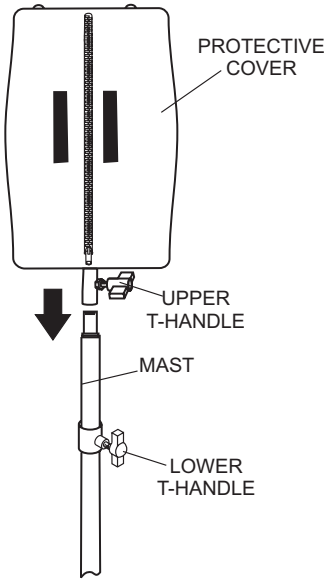

Figure 8. Light Asembly Placement

2. Unsnap the three buttons on the bottom of the balloon. Expose the balloon by pulling down on the velcro tab and unzip the protective cover as shown in Figure 9. Also remove the AC power cord at this time.

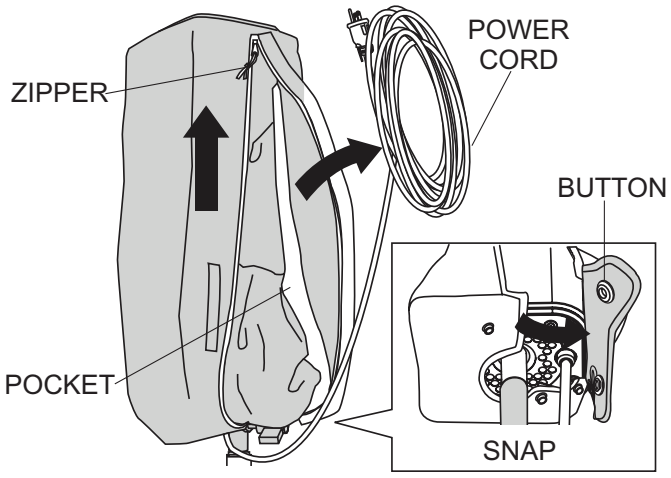

Figure 9. Removing Balloon/AC Power Cord

3. Next, fold the protective cover (Figure 10) into itself and zip.

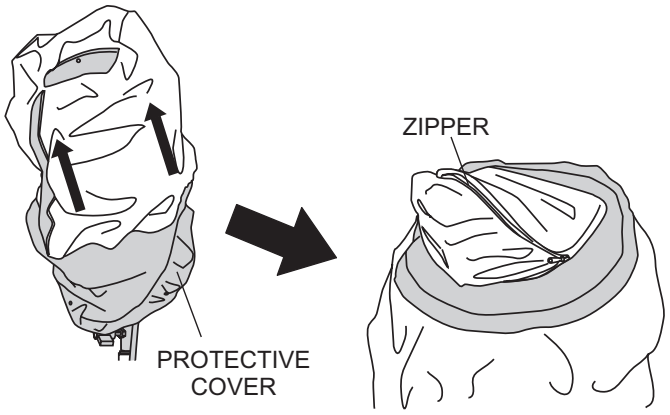

Figure 10. Folding Protective Cover

4. Attach the S-type hook (Figure 11) on the AC power cable onto the washer-eylet located on the bottom plate of the light assembly.

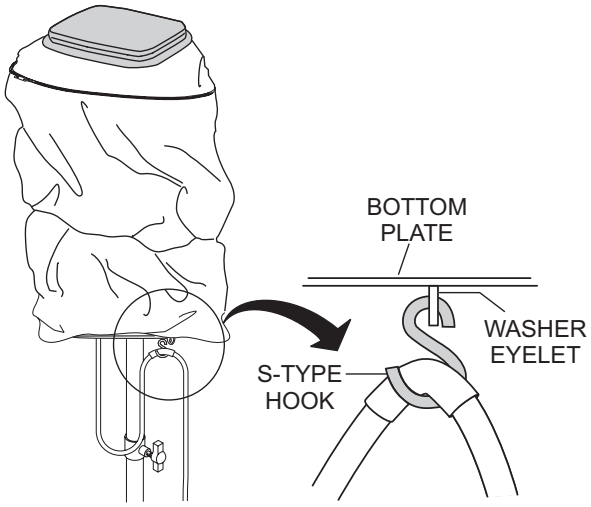

Figure 11. Securing Power Cord

RAISING THE MAST

Before raising the mast, make sure the upper T-handle bolt lock (Figure 12) is securely tightened. This will prevent the balloon/lamp assembly from falling off. In addition make sure that the lamp power cable is connected to the mating end of the 11 ft (3.35 meters) power source cable.

DANGER

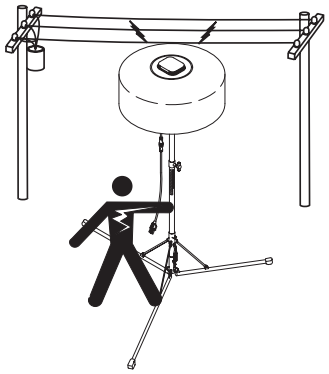

ALWAYS make sure the area above the lighting system is open and clear of overhead power lines and other obstructions. The mast extends in excess of 11 ft. (3.35 meters) when an optional extension is used. Contact with overhead power lines or other obstructions could result in equipment damage, serious Injury or death!

CAUTION

When raising mast, **ALWAYS** be on the lookout for overhead obstructions such as high voltage power lines. The possibility exists of electrocution, even death! if the lighting system comes in contact with high voltage power lines.

DANGER

When raising mast, **ALWAYS** be on the lookout for overhead obstructions such as high voltage power lines. The possibility exists of electrocution, even death! if the lighting system comes in contact with high voltage power lines.

5. To improve stability and to prevent tipping of the light unit, place sand bags or similar type weight over the pentapod legs or weight hook as shown in Figure 12.

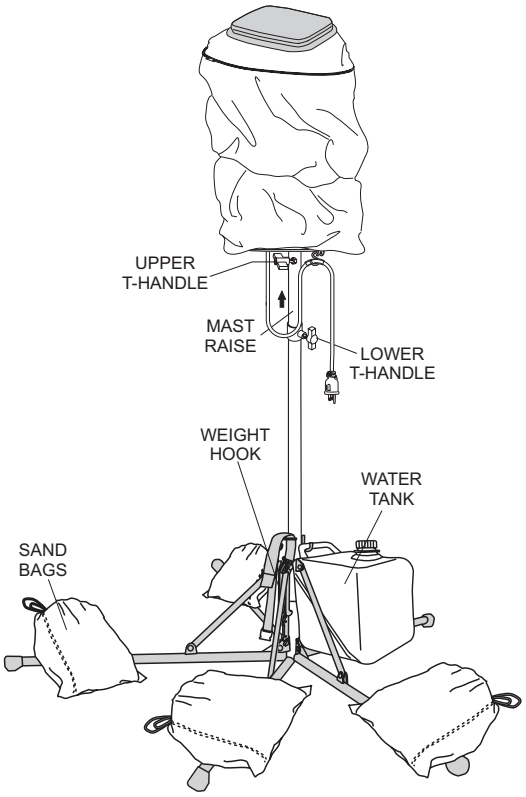

Figure 12. Sand Bags

6. Tighten lower T-handle (Figure 13) securely and raise third mast to desired height.

7. Next, loosen lower T-handle and raise second mast to desired height. Once desired height has been acheived tighten lower T-handle.

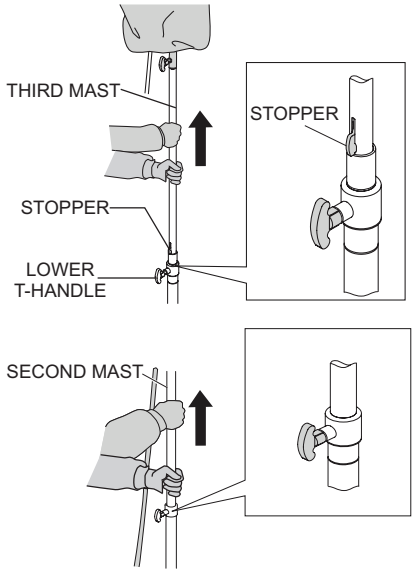

Figure 13. Raising The Mast

APPLYING POWER

1. Connect the AC power cord to a 120 VAC external power source or to a 120 VAC receptacle on a generator (Figure 14).

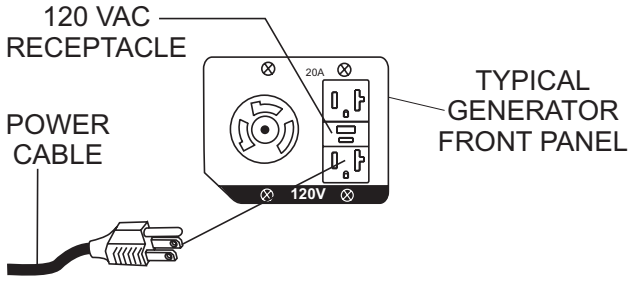

Figure 14. Connecting to Power Source

2. Start the generator as indicated in the generator manual.
3. Turn on the power of the generator. The balloon will start to inflate and the lamp will turn on at 600W.

DIMMING THE LAMP

1. Press the dimmer switch to control the brightness of the lamp (Figure 15). The lamp can be turned off or set to 400W, 600W or 800W. The corresponding LED will light red when selected (Figure 16).

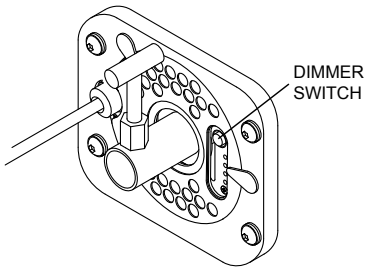

Figure 15. Dimmer Switch

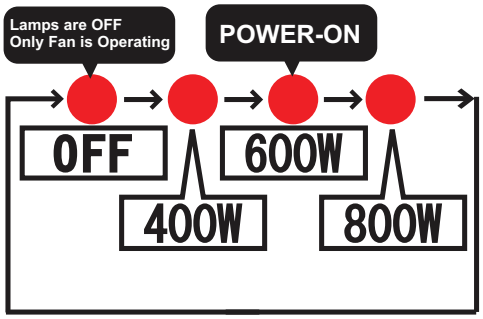

Figure 16. Brightness LED Indicators

2. Zip up the bottom of the balloon completely after use of the dimmer switch.

SILENT MODE

Noise coming from the unit during operation can be eliminated.

1. Press and hold the dimmer switch (Figure 15) for 2 seconds. The blue LED in the center of the switch will flash when in silent mode.
2. To switch back to normal mode, press and hold the dimmer switch for 3 seconds. The blue LED will stop flashing.

NOTICE

The brightness of the lamp can still be adjusted when in silent mode.

When unit is restarted, it will revert to normal mode even if silent mode was selected prior to shutdown.

SHUTDOWN

1. Turn off the power switch of the generator. The balloon should start to deflate and the lamp will turn off.
2. Disconnect the AC power cord from the generator.

STORAGE

1. Loosen the lower T-handle by turning handle counterclockwise (Figure 17). Push down on mast until mast is fully inserted into mast housing. Tighten T-handle fully.

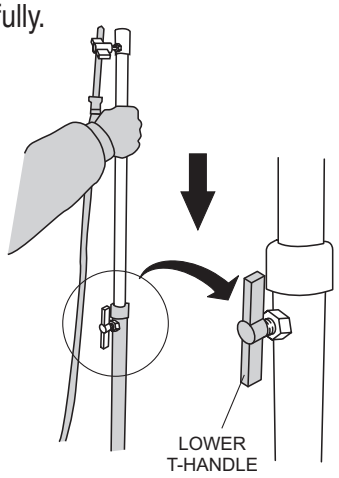

Figure 17. Lowering the Mast

2. Remove the S-type hook (Figure 18) on the AC power cord from the washer-eylet located on the bottom plate of the light assembly.

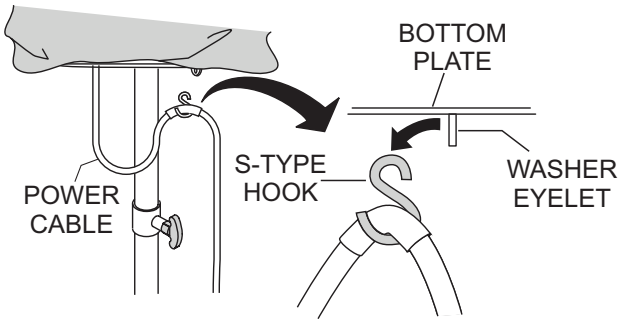

Figure 18. removing Power Cable

3. Unzip the zipper on the protective cover (Figure 19) and roll down the protective cover over the balloon cloth.

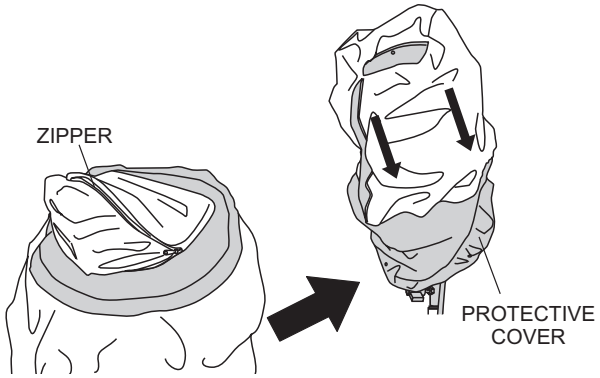

Figure 19. Unzipping the Protective Cover

4. Store the power cable inside the pocket of the protective cover (Figure 20). Zip up the protective cover and snap the buttons on the bottom of the protective cover.

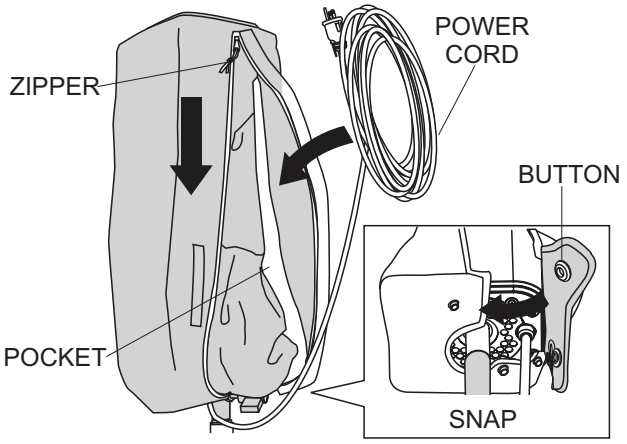

Figure 20. Zipping the Protective Cover

5. Loosen upper T-handle by turning counterclockwise and lift lamp assembly from mast.

6. Store lamp assembly enclosed with its protective cover (Figure 21) in a safe location where it will not be damaged.

Figure 21. Storing Lamp Assembly

7. To retract pentapod legs (Figure 22) and place in the stow position, grab hold of the mast while pulling up on the velcro strap (releases latch). Continue pulling upward on the velcro strap until the pentapod legs are fully retracted and are in the stow position.

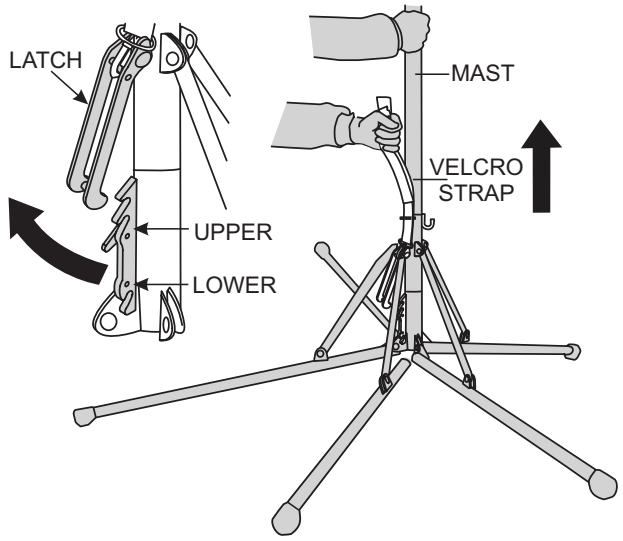

Figure 22. Retracting Pentapod Legs

8. Continue pulling upward (Figure 23) on the velcro strap until all 5 pentapod legs are fully retracted and are in the stow position.

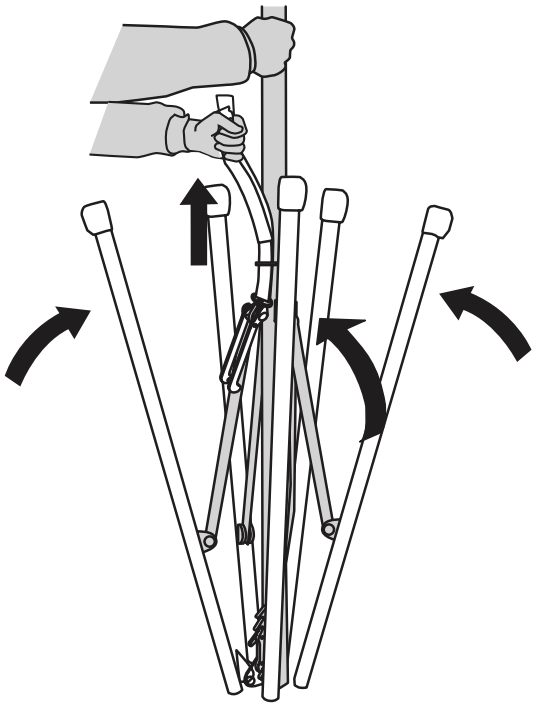

Figure 23. Pentapod Legs Stow Position

9. Once pentapod legs are in the stowed position, place velcro strap (Figure 24) around all 5 legs. Secure legs by inserting the male and female connector ends of the strap into each other.

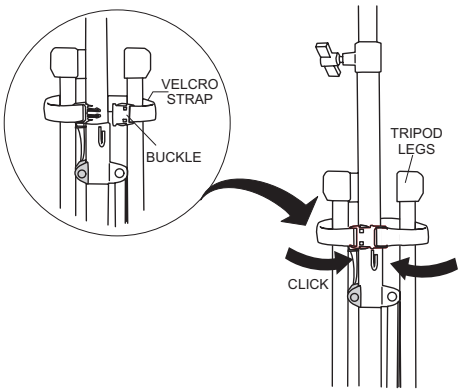

Figure 24. Velcro Strap (Closed)

10. Place pentapod (Figure 25) inside protective carrying case.

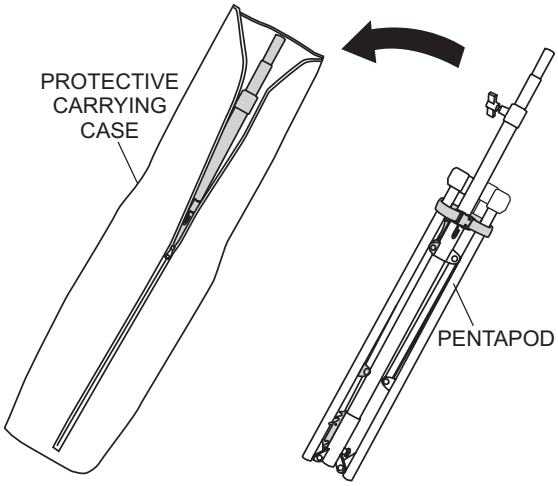

Figure 25. Carrying Case

REPLACING THE LAMP

NOTICE

Contact Multiquip Technical Support Department for assistance in replacing LED lamps.

REPLACING BALLOON ENVELOPE

1. Unzip the zipper (Figure 26) at the top and bottom of the balloon envelope (cover).

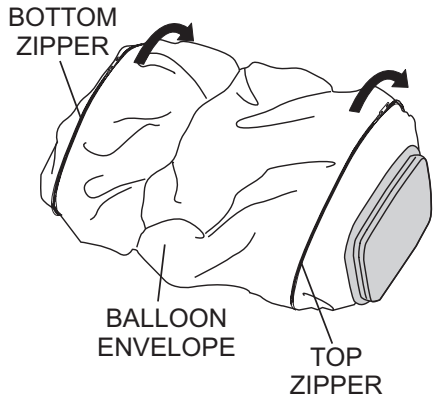

Figure 26. Unzipping the Balloon Envelope

2. Slide the old or worn balloon envelope (Figure 27) over the top of the lamp guard assembly.

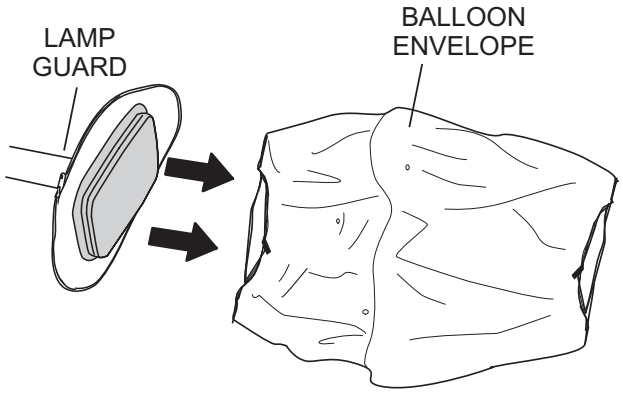

Figure 27. Removing the Balloon Envelope

3. Slide the new balloon (Figure 28) envelope over the top of the lamp guard assembly.

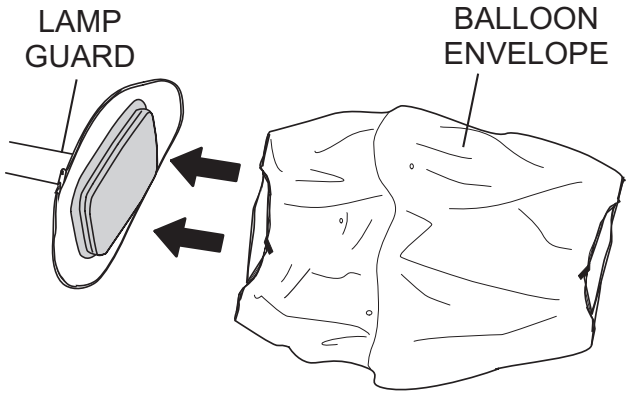

Figure 28. Installing New Balloon Envelope

4. Zip up the zipper (Figure 29) at the top and bottom of the balloon envelope (cover).

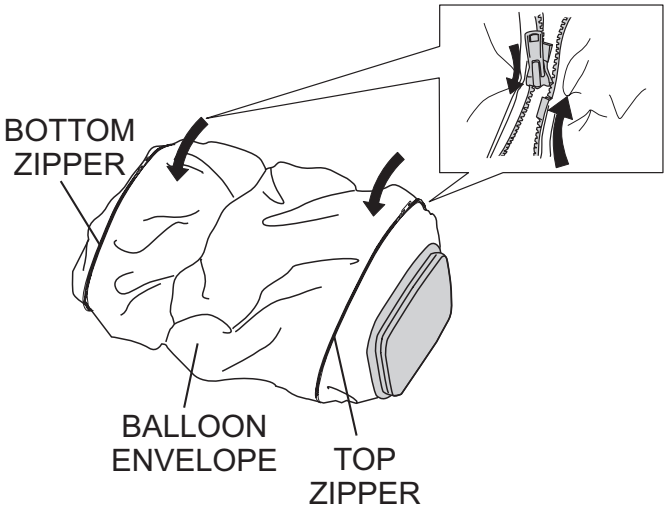

Figure 29. Zipping the Balloon Envelope

FILTER REPLACEMENT

1. Remove the balloon as described in the STORAGE section.
2. Turn the balloon/lamp assembly upsidedown to access the filter. See Figure 30.

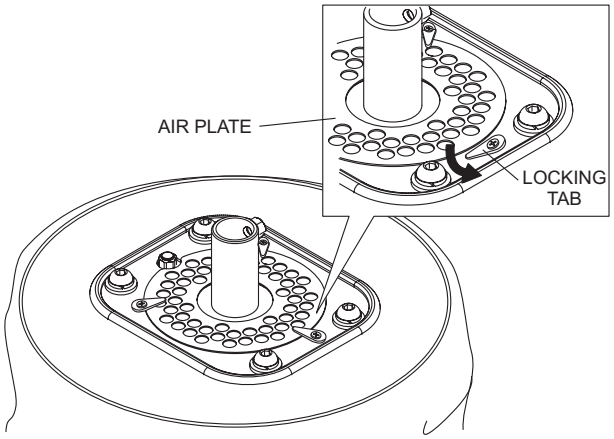

Figure 30. Accessing Filter

3. Turn the three locking tabs outwards to release the air plate. See Figure 30.
4. Remove the air plate and filter. See Figure 31.

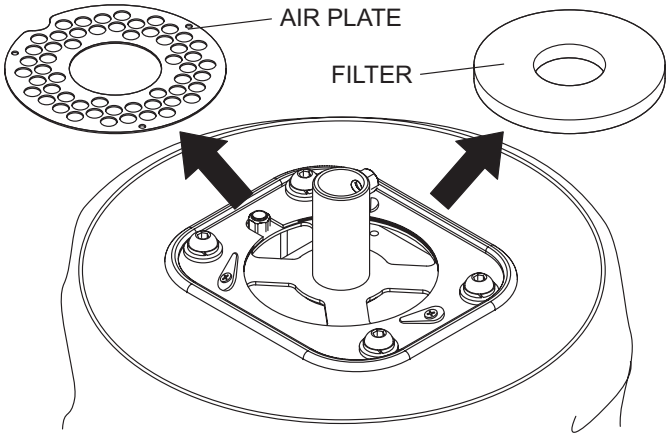

Figure 31. Filter Removal

5. Install a new filter and reinstall the air plate.
6. Turn the three locking tabs inwards to lock the air plate in place. See Figure 32.

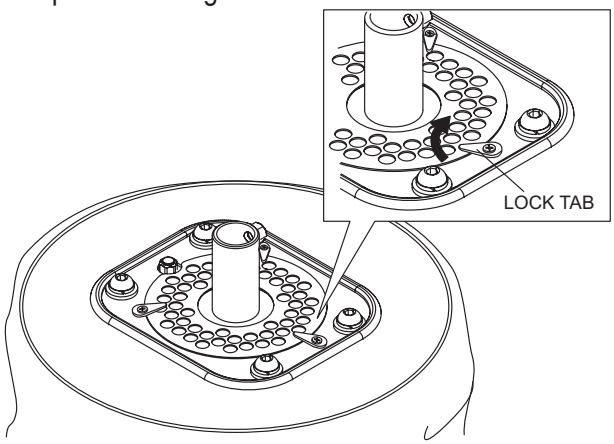

Figure 32. Locking Air Plate

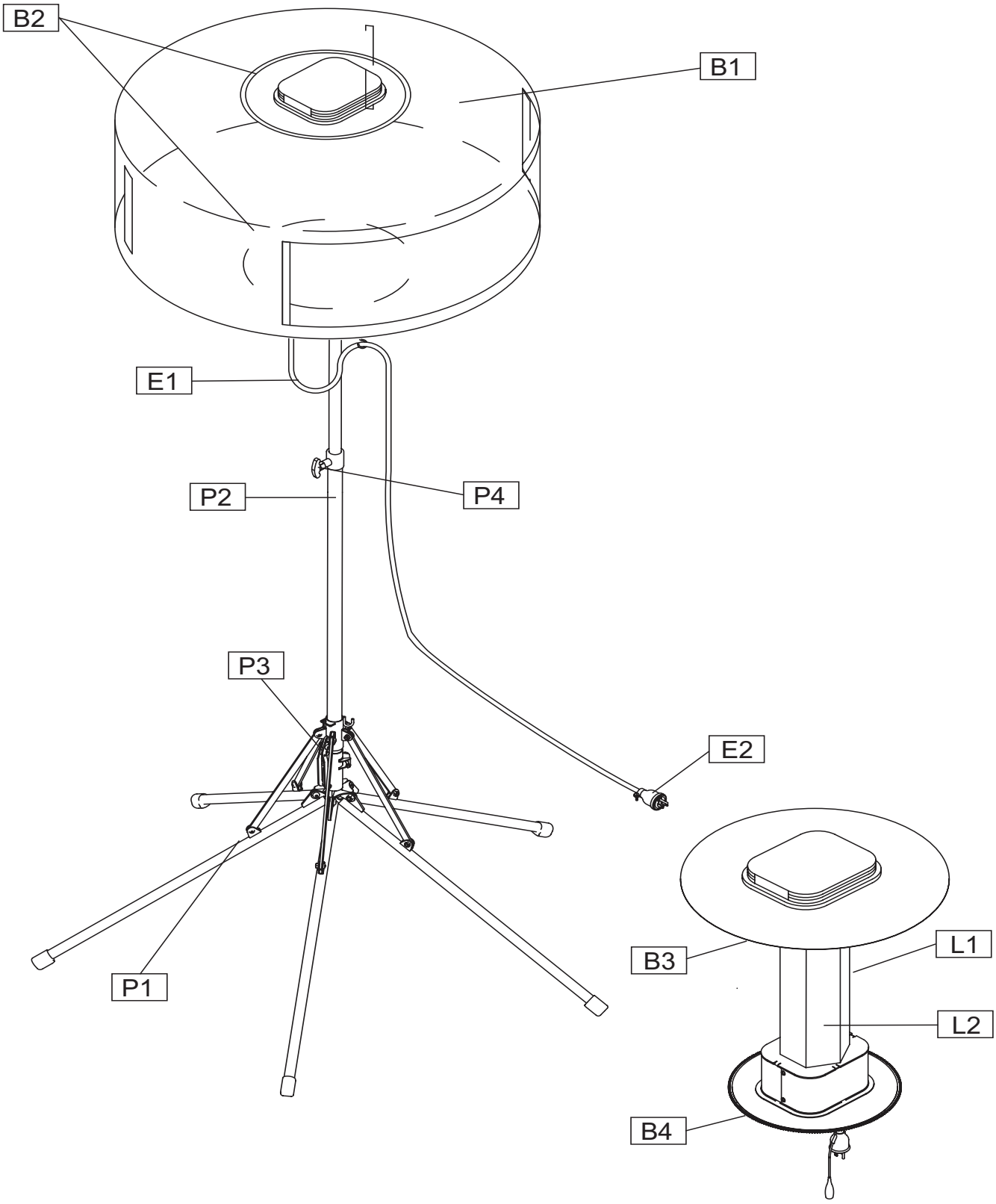

Figure 33. Maintenance Check Points

For a prolonged life cycle an extended quality follow the recommended GloBug lighting system service guidelines as referenced in Figure 33 and Table 3.

Table 3. Periodic Check and Maintenance

Figure		Part	Check Item	Solution	Symbol
Lamp	L1	Lamp Guard	Dirty, rusty or damaged?	Clean/Replace	◊
	L2	LED Lamp	Defective or broken?	Replace	❖
Balloon	B1	Balloon (Envelope)	Ripped or dirty?	Replace	❖
	B2	Zipper	Broken?	Replace	❖
	B3	Fan Motor (Blower)	Not working properly?	Replace	■
	B4	T-Handle bolt (Balloon)	Broken?	Replace	❖
Electric	E1	Power Cable	Defective or worn cable?	Replace.	❖
	E2	Plug	Damaged?	Replace	♦
Pentapod	P1	Pentapod	Damaged or not working properly?	Replace	♦
	P2	Mast	Damaged or not working properly?	Replace	♦
	P3	Hook	Damaged?	Replace	❖
	P4	T-Handle Knob (Mast)	Damaged?	Replace	❖
❖ - Daily Check ♦ - Every 20 Hours ■ - Every 100 Hours ◊ - Every 500 Hours					

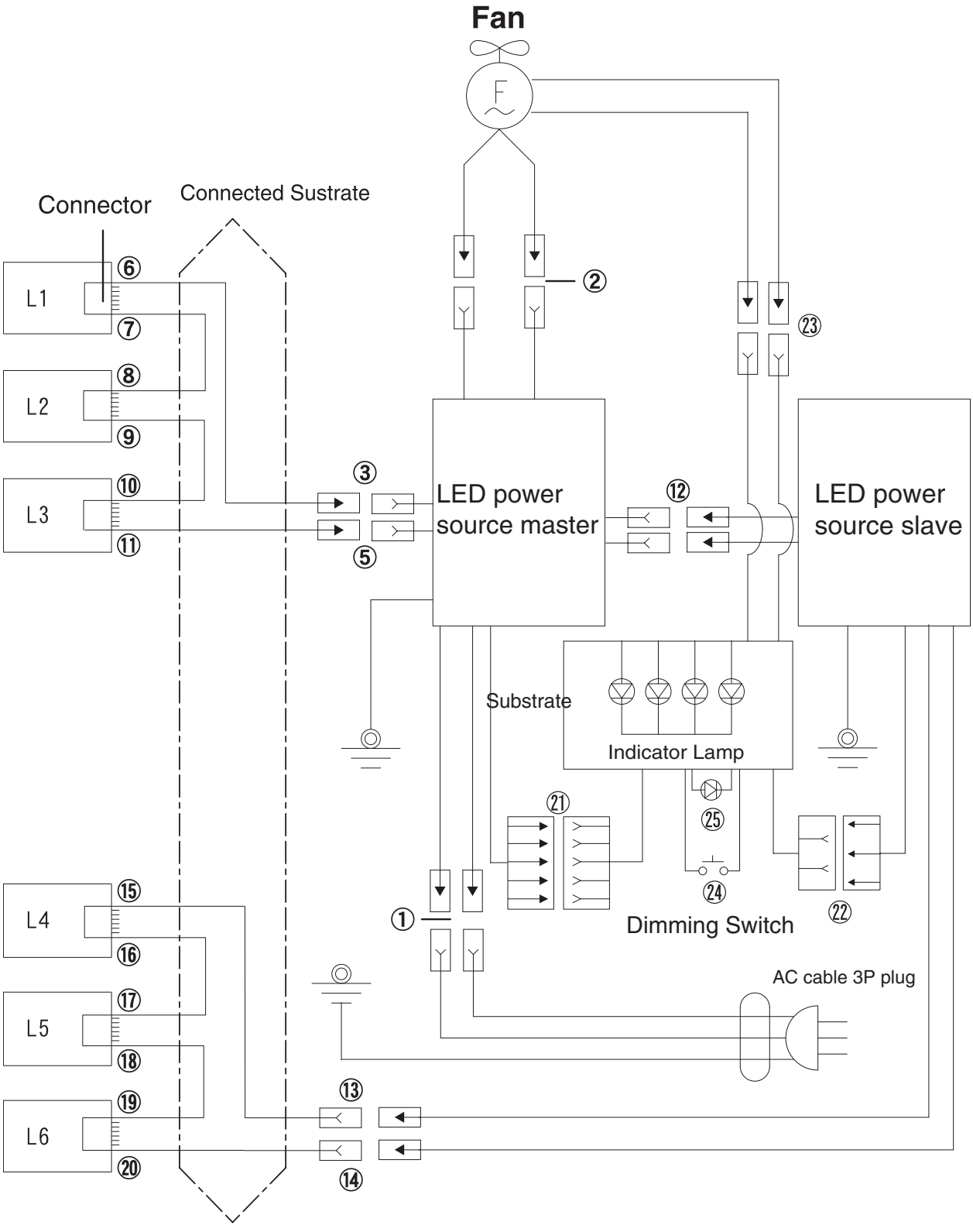

Figure 34. Electrical Wiring Diagram

Fan's Performance Impairment

Fan is not working

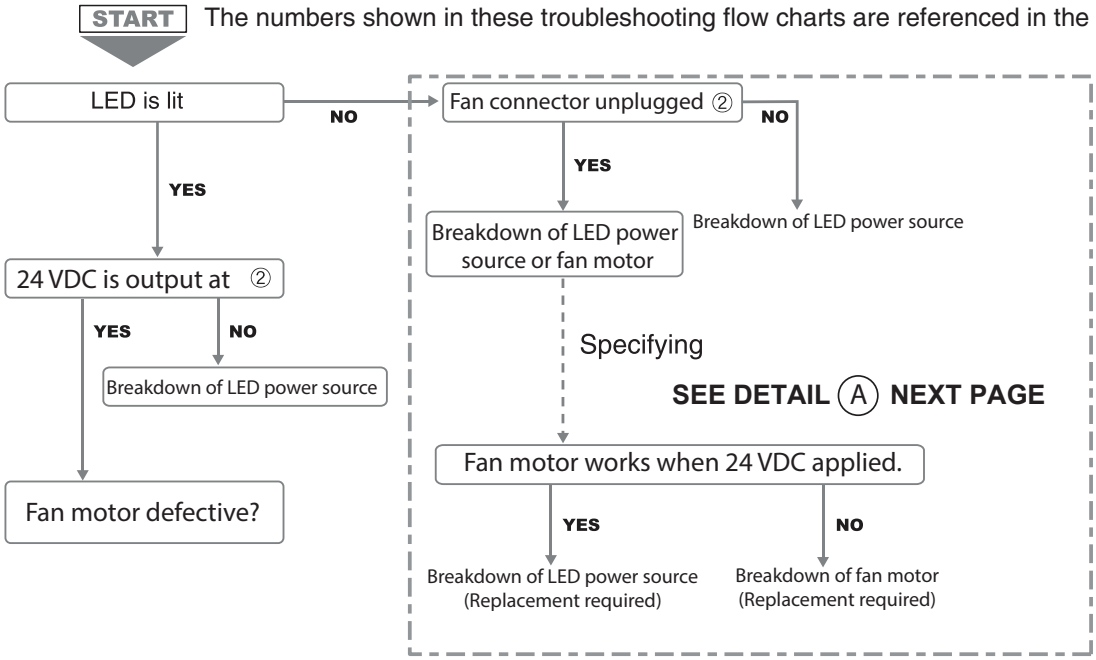

Silent mode not wokring?

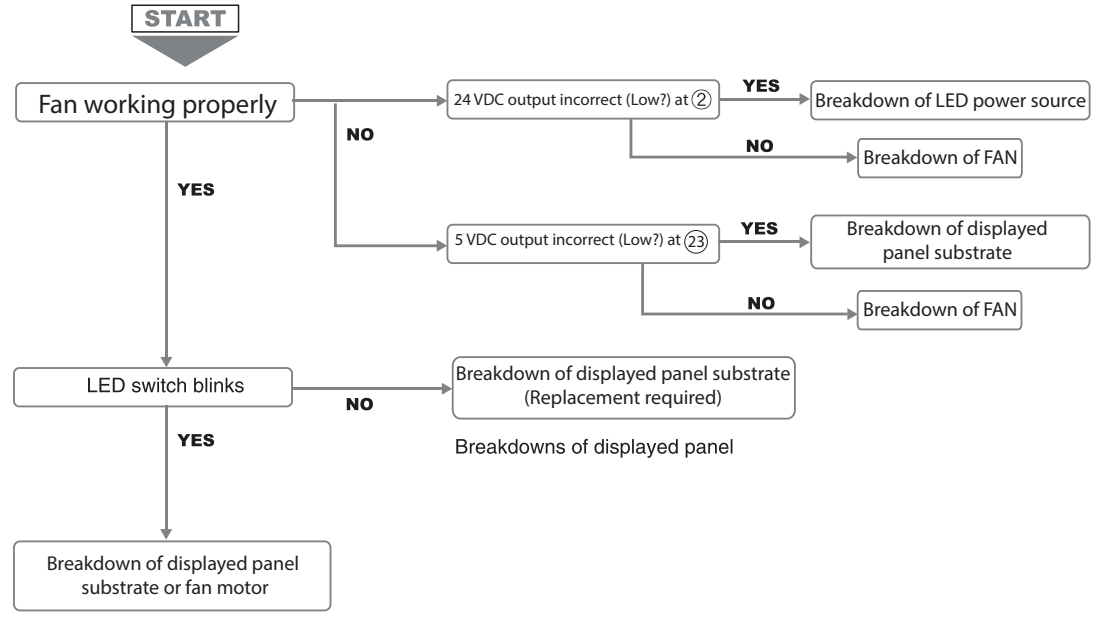

Lamp's Performance Impairment

◎ Use the power source which none of machineries are plugged in.

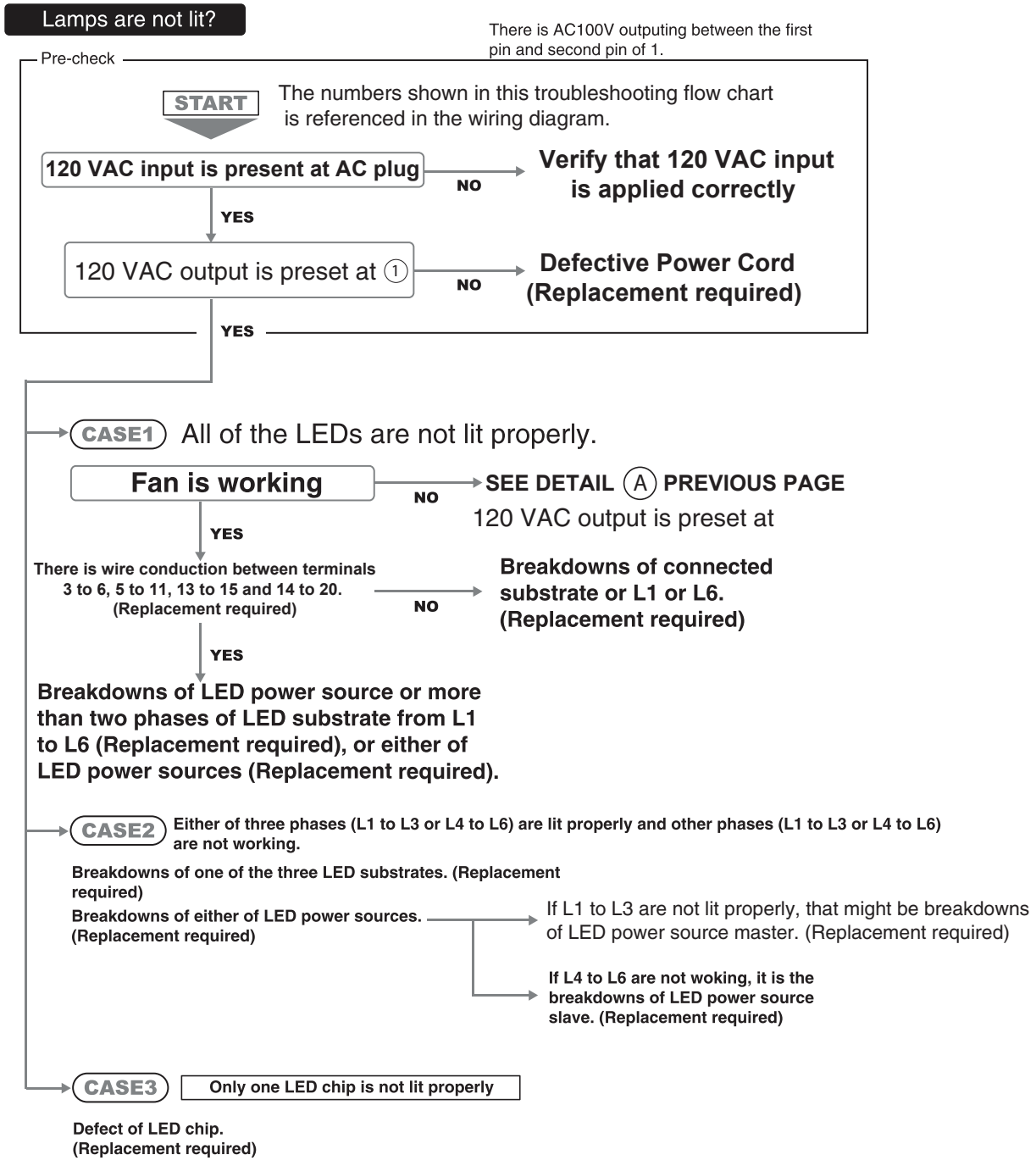

Insufficient Air Inside Balloon

◎ Confirm the fan is working properly.

Balloon is not bulged.

1	Zipper is opened	→ Close the zipper properly.
2	Balloon cloth is torn.	→ Repairing or exchanging the balloon cloth
3	The filter is clogged up	→ Cleaning up or exchanging the filter.
4	Silent mode	→ Holding down on switch to set up the normal mode.

How to clean up the filter.

■ Remove the filter.

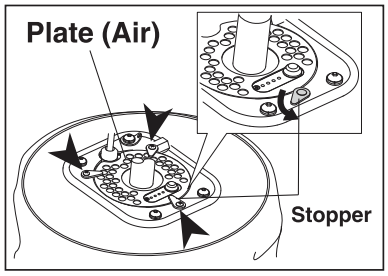

Use three stoppers to hold the plate.

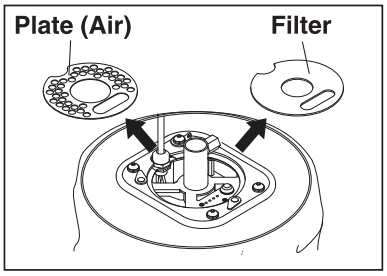

Remove the plate and filter.

When installing.

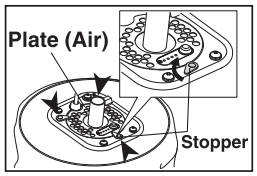

Install the plate and filter in reverse order of when removing them.

■ Simple cleaning

● **Beat the dust out of the filter.**

● **Use a vacuum cleaner to remove dust and debris.**

■ Washing

- **Use neutral detergent.**
- **When you put the filter in the washing machine, please use the laundry net.**
- **After washing, please dry it adequately and replace it. If filter is not completely DRY it will not filter properly. In cold weather conditions it could become frozen replace it.**

If any debris or substance is firmly attached to the filter replace it.

Troubleshooting		
Symptom	**Possible Problem**	**Solution**
Lamp does not light.	Is power plug connected?	Plug in correctly.
	Is generator's main CB turned off?	Turn on CB.
	Are any wire cables disconnected?	Connect disconnected wire cable.
	Are any other electric appliances (other than light tower) plugged into power source?	Unplug all other appliances.
	Is generator voltage not normal (standby voltage - 120 ± 5 V)?	Use proper voltage.
Balloon is not inflating.	Is zipper unzipped?	Zip balloon completely.
	Is fan motor not properly operating?	Inspect and repair fan motor if necessary.
	Is balloon torn?	Repair balloon.
	Is unit in silent mode?	Cancel silent mode.

EXPLANATION OF CODE IN REMARKS COLUMN

The following section explains the different symbols and remarks used in the Parts section of this manual. Use the help numbers found on the back page of the manual if there are any questions.

NOTICE

The contents and part numbers listed in the parts section are subject to change **without notice**. Multiquip does not guarantee the availability of the parts listed.

SAMPLE PARTS LIST

NO.	PART NO.	PART NAME	QTY.	REMARKS
1	12345	BOLT	1	INCLUDES ITEMS W/%
2%		WASHER, 1/4 IN		NOT SOLD SEPARATELY
2%	12347	WASHER, 3/8 IN	1	MQ-45T ONLY
3	12348	HOSE	A/R	MAKE LOCALLY
4	12349	BEARING	1	S/N 2345B AND ABOVE

NO. Column

Unique Symbols — All items with same unique symbol

(@, #, +, %, or >) in the number column belong to the same assembly or kit, which is indicated by a note in the "Remarks" column.

Duplicate Item Numbers — Duplicate numbers indicate multiple part numbers, which are in effect for the same general item, such as different size saw blade guards in use or a part that has been updated on newer versions of the same machine.

NOTICE

When ordering a part that has more than one item number listed, check the remarks column for help in determining the proper part to order.

PART NO. Column

Numbers Used — Part numbers can be indicated by a number, a blank entry, or TBD.

TBD (To Be Determined) is generally used to show a part that has not been assigned a formal part number at the time of publication.

A blank entry generally indicates that the item is not sold separately or is not sold by Multiquip. Other entries will be clarified in the "Remarks" Column.

QTY. Column

Numbers Used — Item quantity can be indicated by a number, a blank entry, or A/R.

A/R (As Required) is generally used for hoses or other parts that are sold in bulk and cut to length.

A blank entry generally indicates that the item is not sold separately. Other entries will be clarified in the "Remarks" Column.

REMARKS Column

Some of the most common notes found in the "Remarks" Column are listed below. Other additional notes needed to describe the item can also be shown.

Assembly/Kit — All items on the parts list with the same unique symbol will be included when this item is purchased.

Indicated by:

"INCLUDES ITEMS W/(unique symbol)"

Serial Number Break — Used to list an effective serial number range where a particular part is used.

Indicated by:

"S/N XXXXX AND BELOW"
"S/N XXXX AND ABOVE"
"S/N XXXX TO S/N XXX"

Specific Model Number Use — Indicates that the part is used only with the specific model number or model number variant listed. It can also be used to show a part is NOT used on a specific model or model number variant.

Indicated by:

"XXXXX ONLY"
"NOT USED ON XXXX"

"Make/Obtain Locally" — Indicates that the part can be purchased at any hardware shop or made out of available items. Examples include battery cables, shims, and certain washers and nuts.

"Not Sold Separately" — Indicates that an item cannot be purchased as a separate item and is either part of an assembly/kit that can be purchased, or is not available for sale through Multiquip.

GLOBUG GB8LED LIGHTING SYSTEM

1 TO 3 UNITS

Qty.	P/N	Description
3	A300282600	LED HEATSINK ASSY
2	A100108400	BALLOON CLOTH

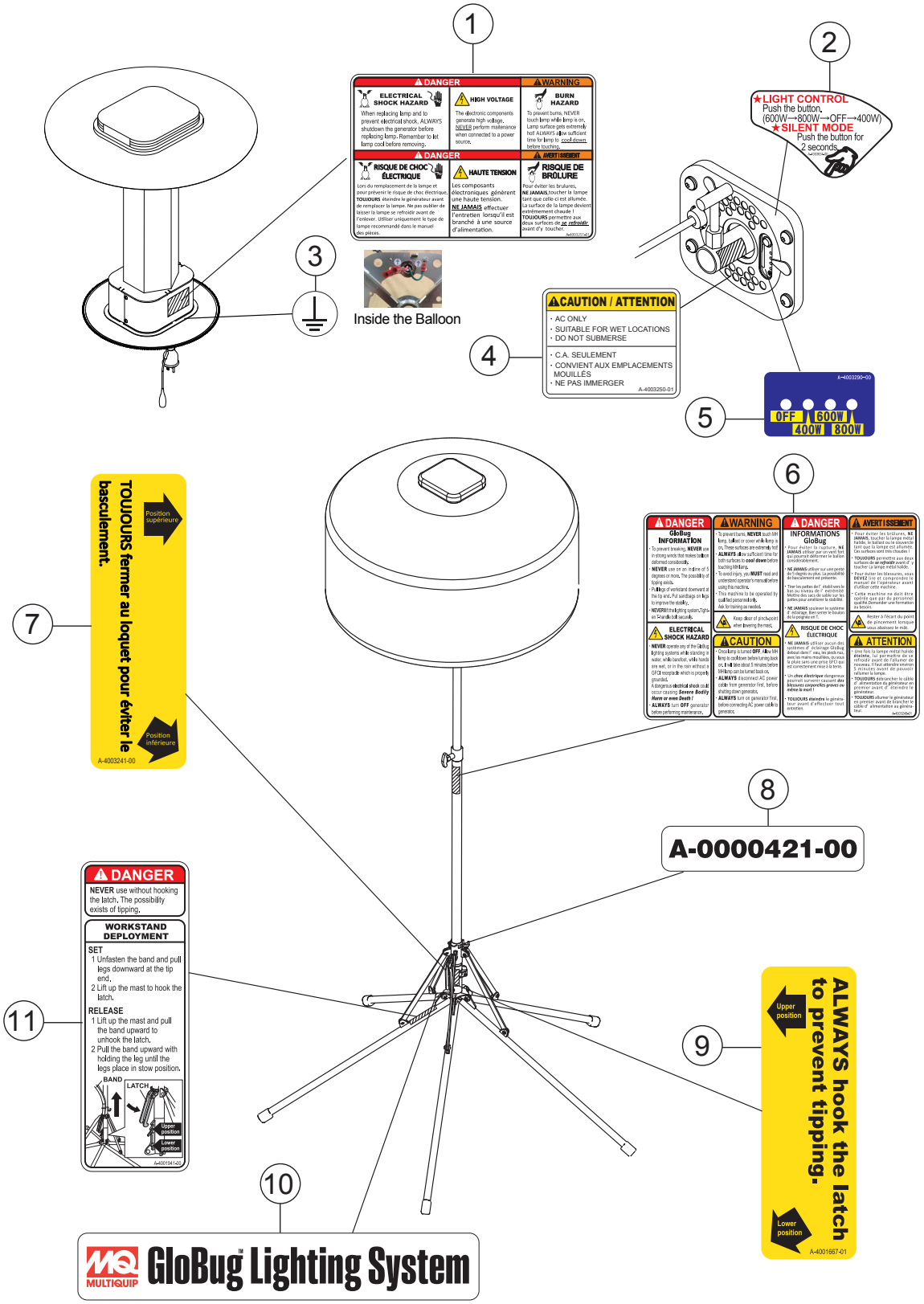
1
DANGER
ELECTRICAL SHOCK HAZARD
When replacing lamp and to prevent electrical shock, ALWAYS shutdown the generator before replacing lamp. Remember to let lamp cool before removing.
HIGH VOLTAGE
The electronic components generate high voltage, NEVER perform maintenance when connected to a power source.
WARNING
BURN HAZARD
To prevent burns, NEVER touch lamp while lamp is on. Lamp surface gets extremely hot! ALWAYS allow sufficient time for lamp to cool down before touching.
DANGER
RISQUE DE CHOC ÉLECTRIQUE
Lors du remplacement de la lampe et pour prévenir le risque de choc électrique, TOUJOURS éteindre le générateur avant de remplacer la lampe. Ne pas oublier de laisser la lampe se refroidir avant de l'enlever. Utiliser uniquement le type de lampe recommandé dans le manuel des pièces.
HAUTE TENSION
Les composants électroniques génèrent une haute tension. NE JAMAIS effectuer l'entretien lorsqu'il est branché à une source d'alimentation.
AVERTISSEMENT
RISQUE DE BRÛLURE
Pour éviter les brûlures, NE JAMAIS toucher la lampe tant que celle-ci est allumée. La surface de la lampe devient extrêmement chaude ! TOUJOURS permettre aux deux surfaces de se refroidir avant d'y toucher.
2
★LIGHT CONTROL
Push the button, (600W→800W→OFF→400W)
★SILENT MODE
Push the button for 2 seconds.
3
Inside the Balloon
4
CAUTION / ATTENTION
• AC ONLY
• SUITABLE FOR WET LOCATIONS
• DO NOT SUBMERSE
• C.A. SEULEMENT
• CONVIENT AUX EMPLACEMENTS MOUILLÉS
• NE PAS IMMERGER
5
OFF
600W
400W
800W
6
DANGER
GloBug INFORMATION
WARNING
DANGER
INFORMATIONS GloBug
AVERTISSEMENT
ELECTRICAL SHOCK HAZARD
CAUTION
RISQUE DE CHOC ÉLECTRIQUE
ATTENTION
7
TOUJOURS fermer au loquet pour éviter le basculement.
Position supérieure
Position inférieure
A-4003241-00
8
A-0000421-00
9
ALWAYS hook the latch to prevent tipping.
Upper position
Lower position
A-4001657-01
10
MQ MULTIQUIP GloBug™ Lighting System
11
DANGER
NEVER use without hooking the latch. The possibility exists of tipping.
WORKSTAND DEPLOYMENT
SET
1 Unfasten the band and pull legs downward at the tip end.
2 Lift up the mast to hook the latch.
RELEASE
1 Lift up the mast and pull the band upward to unhook the latch.
2 Pull the band upward with holding the leg until the legs place in stow position.
BAND
LATCH
Upper position
Lower position
A-4001641-20

NO.	PART NO.	PART NAME	QTY.	REMARKS
1	A400325101	DECAL; ELECTRIC SHOCK, HIGH VOLTAGE, BURN HAZ.	1	
2	A400363400	DECAL; LIGHT CONTROL	1	
3	A400084300	DECAL; GROUND	1	
4	A400325001	DECAL; CAUTION, CSA	1	
5	A400329000	DECAL; DIMMER SWITCH LEDS	1	
6	A400324801	DECAL; GLOBUG INFORMATION	1	
7	A400324100	DECAL: HOOK LATCH (FRENCH)	1	
8	A400207303	DECAL;NAME	1	
9	A400166701	DECAL; HOOK LATCH (ENGLISH)	1	
10	A400193300	DECAL; LOGO MQ-GLOBUG	1	
11	A400194100	DECAL; DANGER, WORKSTAND DEPLOYMENT	1	

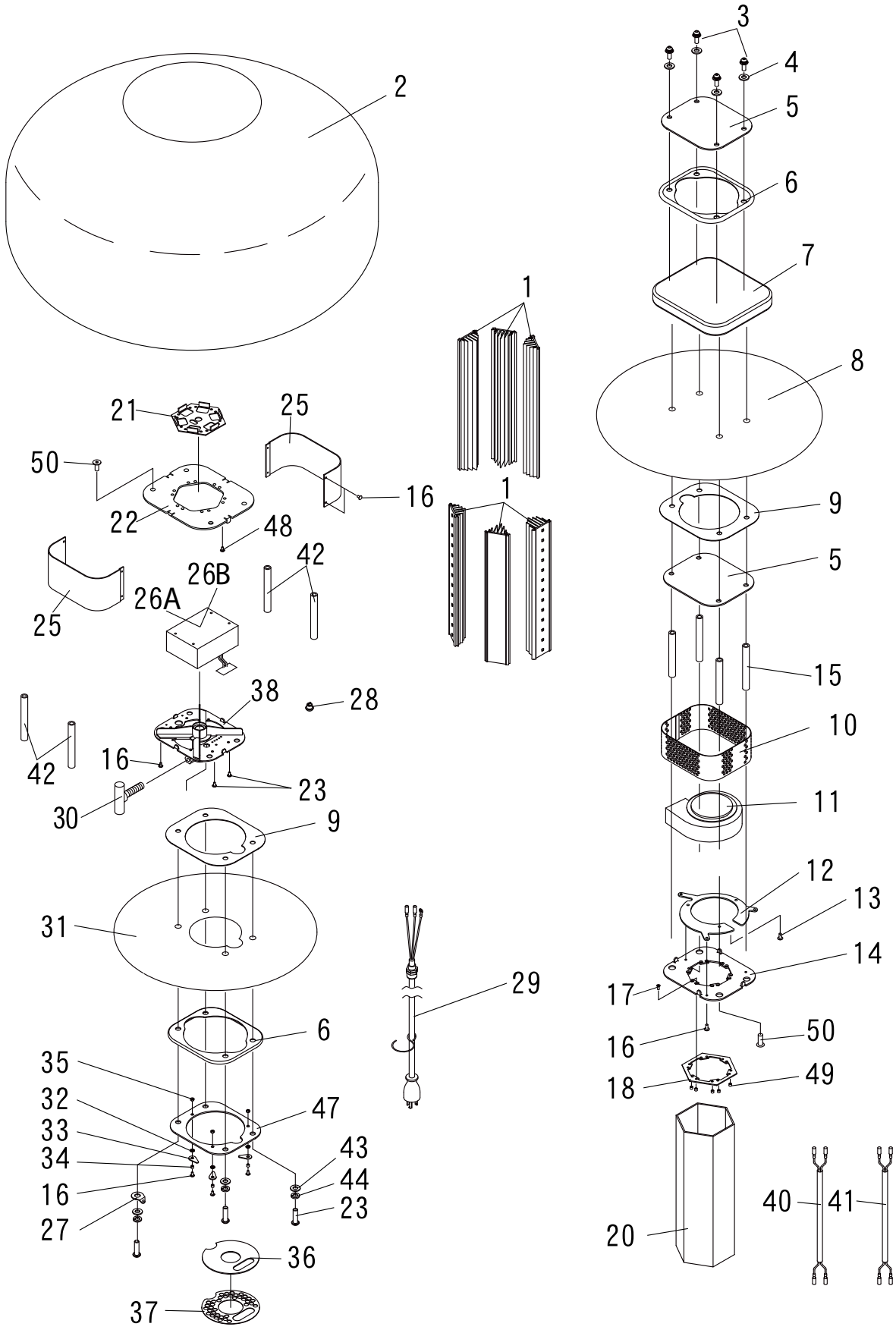
2
3
4
5
6
7
1
8
21
25
50
16
1
9
22
48
42
5
26B
26A
25
15
38
28
10
42
16
23
11
30
9
12
13
31
29
14
17
6
50
16
35
49
18
32
47
33
34
43
44
16
23
27
20
40
41
36
37

NO.	PART NO.	PART NAME	QTY.	REMARKS
1	A300282602	LED HEATSINK ASSY.	6	
2	A100108400	BALLOON, CLOTH	1	
3	0014708025	BUTTON SCREW, M8X25	4	
4	E000132100	SUS OPG BONDED WASHER	4	
5	A300257000	PLATE, TOP	2	
6	A300162400	SEAL, PACKING	2	
7	A100107700	BALLOON COVER (BLACK)	1	
8	A100101200	SHEET, TOP	1	
9	2214500230	SEAL, FLAT	2	
10	A300274701	VESSEL, TOP	1	
11	A300280600	FAN MOTOR ASSY.	1	
12	A300281401	PLATE, FAN	1	
13	0023204006	SCREW, M4X6	3	
14	A300247701	PLATE, LAMP, TOP	1	
15	A400317400	SPACER A	4	
16	0024304008	TRUSS SCREW, M4X8	15	
17	0023204012	COUNTERSUNK SCREW, M4X12	12	
18	A400295300	STOPPER, GUARD	1	
20	A300243602	GUARD, LED	1	
21	A300282500	ADAPTER BOARD	1	
22	A300290400	PLATE, LAMP	1	
23	0014708035	BUTTON SCREW, M8X35	4	
24	0023203005	SCREW, M3X5	2	
25	A300291200	COVER PLATE	2	
26A	A000065000	LED POWER SUPPLY (MASTER)	1	
26B	A000065100	LED POWER SUPPLY (SLAVE)	1	
27	2204510110	WASHER	1	
28	A400329900	DIMMING SWITCH	1	
29	A300181901	POWER CABLE	1	
30	A400209800	BALLOON KNOB	1	
31	A100097600	SHEET, BOTTOM	1	
32	E000119300	WAVE WASHER, M6	3	
33	A400030700	STOPPER	3	
34	E000077500	SPACER	3	
35	0033104000	NUT, M4	5	
36	A400273800	FILTER	1	
37	A300244600	PLATE, AIR	1	
38	A200105100	FLANGE, LED	1	
40	A400305001	WIRE, FAN	1	
41	A400331100	WIRE, FAN (VC)	1	
42	A400311400	SPACER B	4	
43	0043108000	WASHER, M8	4	
44	030208200	WASHER, LOCK 8MM	4	REPLACES P/N 0043208000
47	A300256700	PLATE, BOTTOM	1	
48	0023304015	SCREW/WASHER, M4X15	12	
49	E000122300	SPACER	12	
50	E000119600	BOLT, M8X20	8	

PENTAPOD ASSY.

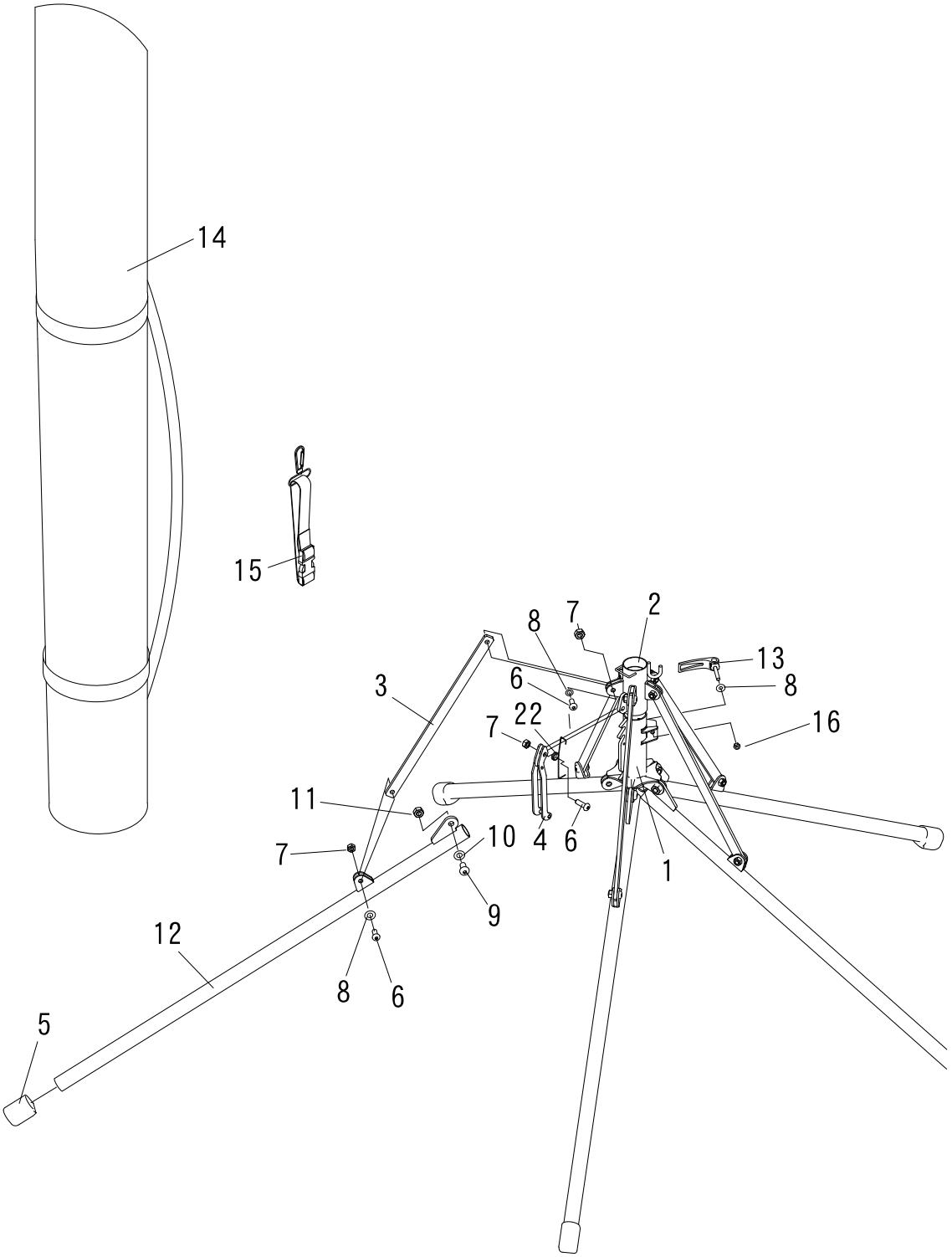

PENTAPOD ASSY.

NO.	PART NO.	PART NAME	QTY.	REMARKS
1	A300180300	BASE PIPE 1	1	
2	A300178000	BASE PIPE 2	1	
3	A300113103	STAY	5	
4	A300108700	SHACKLE	1	
5	1641000330	RUBBER FOOT	5	
6	0014708025	BUTTON SCREW, M8X25	11	
7	0033208000	SELF LOCKNUT, M8	11	
8	0043108000	WASHER, M8	12	
9	0014710025	BUTTON SCREW, M10X25	5	
10	0043110000	WASHER, M10	5	
11	0033210000	SELFLOCK NUT, M10	5	
12	A300171601	PIPE, BASE	5	
13	2212780310	LEVER, CLAMP	1	
14	A300152700	PENTAPOD CARRYING CASE	1	
15	A300106500	BAND	1	
16	0033206000	SELF LOCKNUT, M6	1	
22	A400205901	SPRING, SHACKLE	1	

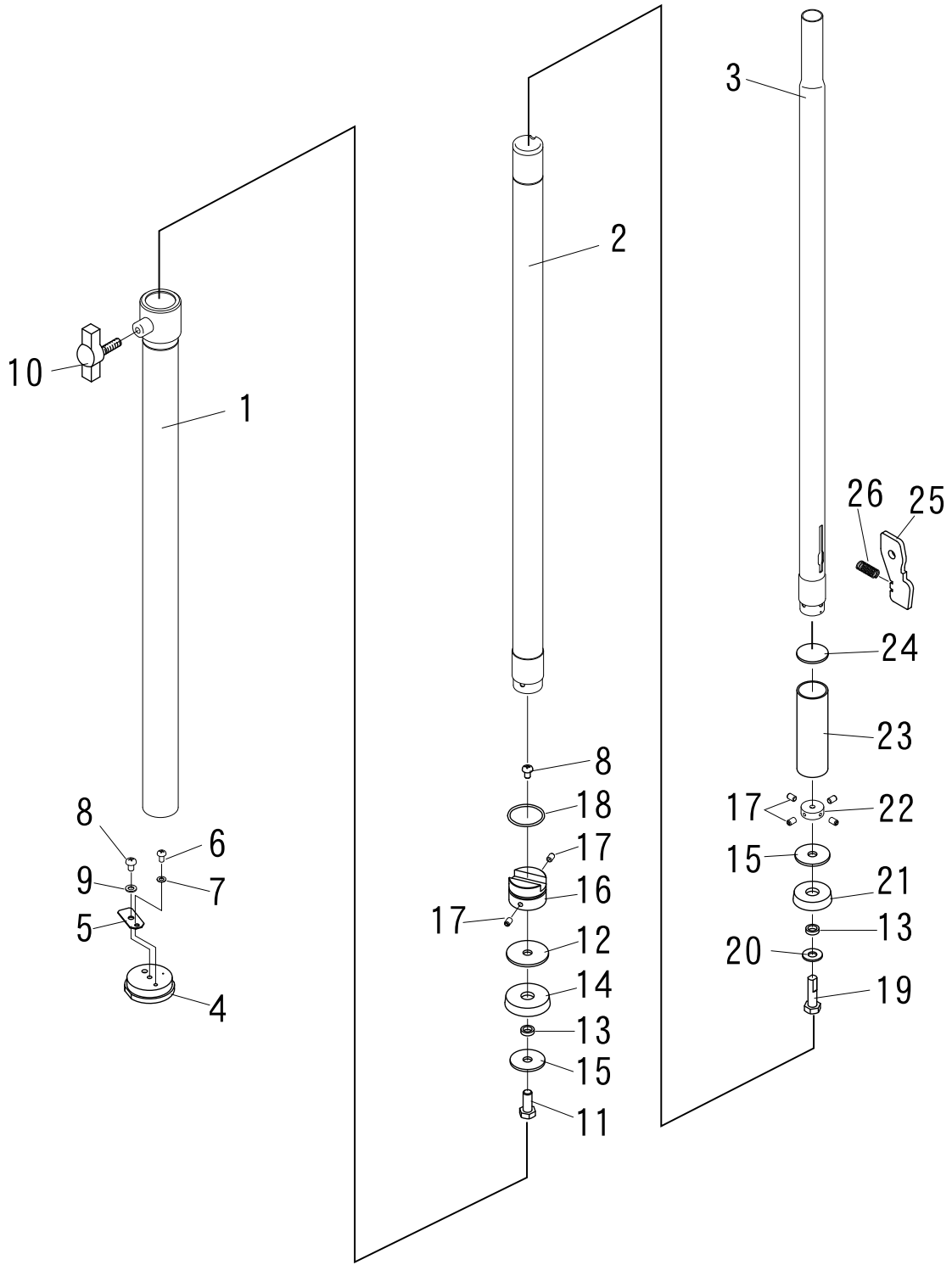
10
1
8
6
9
7
5
4
2
8
18
17
16
17
12
14
13
15
11
3
26
25
24
23
17
22
15
21
13
20
19

NO.	PART NO.	PART NAME	QTY.	REMARKS
1	A300175400	FIRST MAST	1	
2	A300175500	SECOND MAST	1	
3	A300175600	THIRD MAST	1	
4	A400199700	PLUG	1	
5	A400112700	LEAF VALVE	1	
6	0023104008	SCREW, M4X8	1	
7	0043104000	WASHER, M4	1	
8	0023105008	SCREW M5X8	2	
9	0043105000	WASHER, M5	1	
10	A400187601	KNOB, BLACK	1	
11	0013108020	BOLT, M8X20	1	
12	A400200500	WASHER	1	
13	A400110200	WASHER, FIRST MAST	2	
14	A400200700	RUBBER, MAST	1	
15	A400092801	WASHER, SECOND MAST	2	
16	A400200800	BOTTOM PLATE	1	
17	0024705008	SET SCREW, M5X8	6	
18	E000081200	O-RING	1	
19	A400202700	BOLT	1	
20	0043108000	WASHER, M8	1	
21	A400109600	RUBBER, MAST	1	
22	A400092402	BOTTOM PLATE	1	
23	A400200300	PIPE, LEVER	1	
24	A400321800	WASHER	1	
25	A400200201	LEVER, HOOK	1	
26	A400345900	SPRING, HOOK	1	

OPERATION AND PARTS MANUAL

HERE'S HOW TO GET HELP

PLEASE HAVE THE MODEL AND SERIAL NUMBER ON-HAND WHEN CALLING

UNITED STATES

Multiquip Inc.

(310) 537- 3700
6141 Katella Avenue Suite 200
Cypress, CA 90630
E-MAIL: mq@multiquip.com
WEBSITE: www.multiquip.com

CANADA

Multiquip

(450) 625-2244
4110 Industriel Boul.
Laval, Quebec, Canada H7L 6V3
E-MAIL: infocanada@multiquip.com

UNITED KINGDOM

Multiquip (UK) Limited Head Office

0161 339 2223
Unit 2, Northpoint Industrial Estate,
Globe Lane,
Dukinfield, Cheshire SK16 4UJ
E-MAIL: sales@multiquip.co.uk

© COPYRIGHT 2019, MULTIQUIP INC.

Multiquip Inc, the MQ logo are registered trademarks of Multiquip Inc. and may not be used, reproduced, or altered without written permission. All other trademarks are the property of their respective owners and used with permission.

This manual MUST accompany the equipment at all times. This manual is considered a permanent part of the equipment and should remain with the unit if resold.

The information and specifications included in this publication were in effect at the time of approval for printing. Illustrations, descriptions, references and technical data contained in this manual are for guidance only and may not be considered as binding. Multiquip Inc. reserves the right to discontinue or change specifications, design or the information published in this publication at any time without notice and without incurring any obligations.

MULTIQUIP®