MQD3HA

MULTIQUIP® 3" Diaphragm Pump

GALLONS PER MINUTE
90 (340.68 L)

HEAD
25 ft (7.62 M)

ENGINE
Honda GX120

APPLICATIONS

Agricultural, Construction Sites, Dirty Water (muddy, silt, sand, sludge and sewage water), Emergency Response, Excavation, Farms, Floods, Irrigation, Jobsite Drainage, Mining, Municipalities, Septic Tanks, Site Preparation, Standing Water, Water Departments, Water Supply from Lakes/Rivers

STANDARD FEATURES

- Maximum pumping capacity of **90 gallons (340.6 liters) per minute**.
- Maximum lift of **25 feet (7.6 meters)**.
- Sand-cast aluminum construction for durability.
- **3" NPT suction and discharge ports.**
- Pumps water with solid content as large as **1-5/8" (41.275 mm)** in diameter.
- High-Efficiency diaphragm for maximum fluid transfer.
- **2-stage heavy duty forged gear** driven transmission designed to operate pump at **60 strokes per minute**.
- Easy maintenance and cleanout.
- Dual check valve – one each for suction and discharge ports.
- Handles fluids up to **180° F (82° C)**.
- Can run dry without damage.
- **90° rotatable base**.
- Trusted **3.5HP Honda GX120 gasoline engine**.
- Engine oil-alert to protect the engine in the case of low engine oil.
- Heavy-duty wheel kit and tubular steel handle for ease of transportation.

WARRANTY*

MQD3HA: 24 months from date of purchase.

Honda GX120 Engine: 36 months from date of purchase.

Hoses: 3 months from date of purchase.

**Refer to the MULTIQUIP NEW PRODUCT LIMITED WARRANTY FOR FULL TERMS AND CONDITIONS.*

© COPYRIGHT 2026 MULTIQUIP INC. (REV 03192026)

MQD3HA

FEATURES

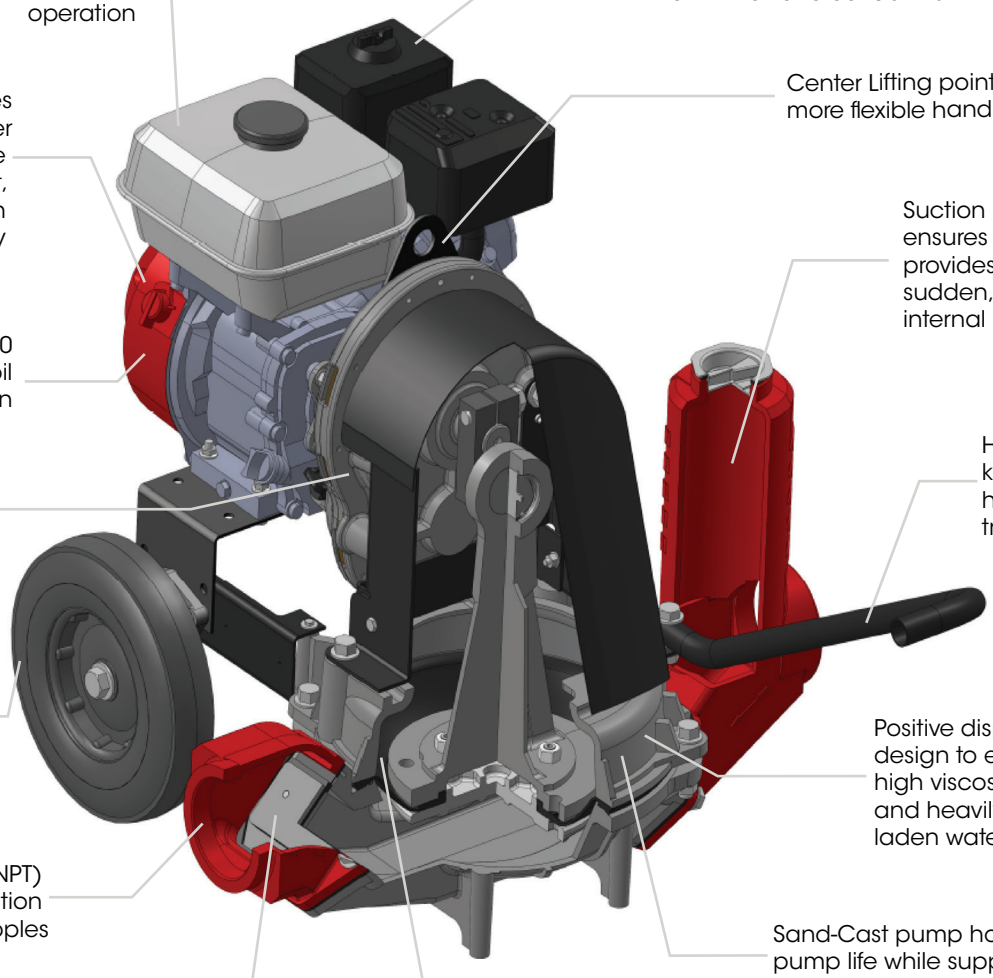

© COPYRIGHT 2026 MULTIQUIP INC. (REV 03192026)

MQD3HA

PUMP CURVE

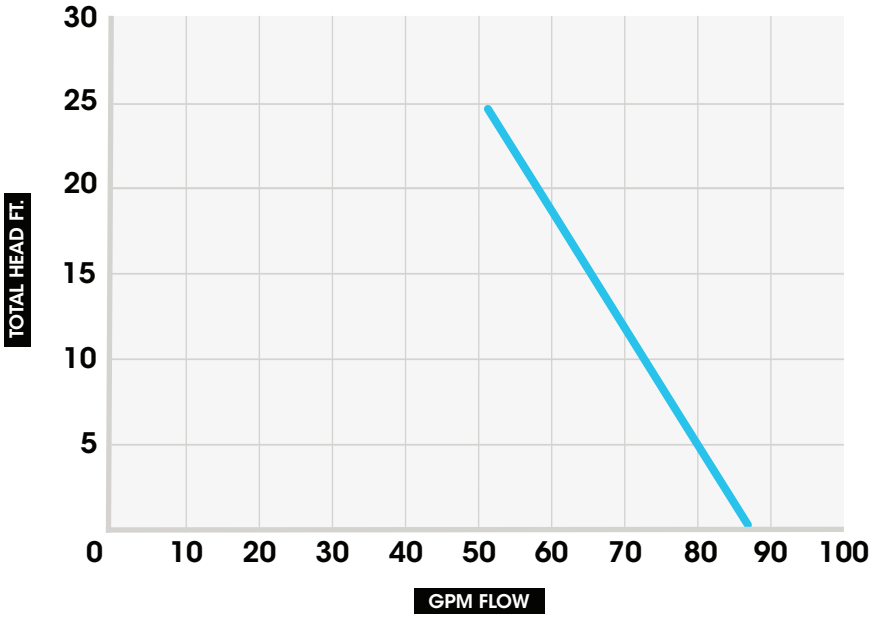

PUMP DIMENSIONS

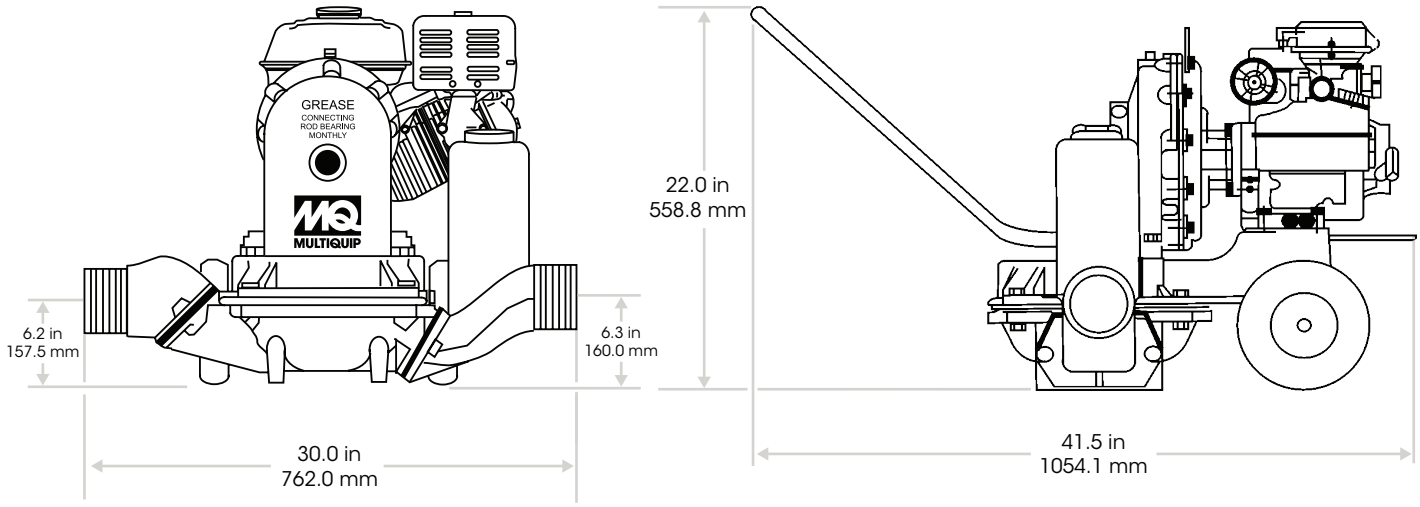

© COPYRIGHT 2026 MULTIQUIP INC. (REV 03192026)

MQD3HA

SPECIFICATIONS

PUMP SPECIFICATIONS	
MODEL	MQD3HA
TYPE	DIAPHRAGM PUMP
MAX. PUMP CAPACITY	90 GALLONS/MIN (340.6 L/MIN)
MAX. SUCTION	25.0 FT (7.62 M)
MAX. HEAD	25.0 FT (7.62 M)
SUCTION/DISCHARGE PORT SIZE	3.00 IN (76.2 MM)
THREAD TYPE	NPT (MALE)
PSI	10.9
DIAPHRAGM MATERIAL	THERMOPLASTIC SANTOPRENE (TPE)
GEAR BOX	OIL BATH
PUMP CASING MATERIAL	SAND-CAST ALUMINUM
CHECK VALVE MATERIAL	NEOPRENE RUBBER
GEAR OIL TYPE	API GL-5 AND MIL-L-2105B
SALT OR CHEMICALS	NO
PUMP HARDWARE	STEEL
MAXIMUM FLUID TEMPERATURE	180° F (82° C)
MAXIMUM SOLID HANDING	1.625 IN. (41.275 MM)
PLUNGER BEARING	NEEDLE
STRAINER SIZE	3.00 IN. (76.2 MM) NPT
STRAINER INLET SIZE	0.375 IN. (9.5 MM)

ENGINE SPECIFICATIONS	
MAKE/MODEL	HONDA/GX120
EMISSIONS	EPA CERTIFIED AND CARB PREEMPT
STARTING METHOD	RECOIL START
DESIGN	AIR-COOLED, 4 STROKE, SINGLE CYLINDER, OHV, HORIZONTAL SHAFT
DISPLACEMENT	119 CC (7.2 CU-IN)
BORE X STROKE	2.4 IN. X 1.7 IN. (60 MM X 42 MM)
HORSE POWER (kW)	3.5 (2.6)
ENGINE SPEED	2,850 RPM
GOVERNOR SPEED	CENTRIFUGAL MASS TYPE
SOUND LEVEL dB(A) AT 23 FT	84
AIR CLEANER	DUAL ELEMENT
LUBRICATION SYSTEM	SPLASH
SPARK ARRESTOR	OPTIONAL
OIL CAPACITY	0.63 QUARTS (0.60 LITERS)
OIL TYPE	SAE 10W-30
LOW OIL SHUT-DOWN	STANDARD

FUEL SPECIFICATIONS	
RECOMMENDED FUEL	UNLEADED GASOLINE
FUEL TANK CAPACITY	0.7 GALLONS (2.65 LITERS)
FUEL CONSUMPTION	0.26 GPH (0.98 LPH)
RUN TIME	2.7 HOURS

WEIGHT AND DIMENSIONS	
DRY WEIGHT	140.0 LB. (63.5 KG)
DIMENSIONS	41.5 x 30.0 x 22.0 IN. (1054.1 x 762.0 x 558.8 MM)

OPTIONS

SUCTION HOSES

- **HS320C –** 3″ x 20 ft., 65psi, rigid PVC helix reinforced, NPS thread
- **HSQ320C –** 3″ x 20 ft., 65psi, rigid PVC helix reinforced, NPT thread, Male Camlock, includes one quick disconnect coupler
- **HS325C –** 3″ x 25 ft., 65psi, rigid PVC helix reinforced, NPS thread
- **HSQ325C –** 3″ x 25 ft., 65psi, rigid PVC helix reinforced NPT thread, Male Camlock, includes one quick disconnect coupler
- **A300A –** 3″ type A coupler, male quick disconnect x female NPT

HS320C and HS325C

HSQ320C and HSQ325C

DISCHARGE HOSES

- **HD350C –** 3″ x 50 ft., 60psi, NPS thread
- **HDQ350C –** 3″ x 50 ft., 60psi NPT thread, includes one quick disconnect coupler
- **A300A –** 3″ type A coupler, male quick disconnect x female NPT

HD350C HDQ350C A300A

© COPYRIGHT 2026 MULTIQUIP INC. (REV 03192026)

NOTICE Features and Specifications are subject to change without notice.