PARTS MANUAL

MULTIQUIP®

Mikasa SERIES

MODEL MRH800GS

Vibratory Roller

(HONDA GX390K1SM32/GX390U1SM32/ GX390UT2SM32/GX390UT2SCM1 GASOLINE ENGINES)

Revision #10 (06/11/20)

To find the latest revision of this publication or associated operation manual, visit our website at: www.multiquip.com

THIS MANUAL MUST ACCOMPANY THE EQUIPMENT AT ALL TIMES.

MRH800GS Vibratory Roller

Explanation Of Code In Remarks Column..... 4
Suggested Spare Parts 5

Roller Component Drawings

Nameplate And Decals..... 6–9
Axle Assembly 10–11
Base Assembly..... 12–13
Front Guard Assembly..... 14–15
Side Cover Assembly 16–17
Water Tank Assembly 18–19
Hydraulic System Assembly 20–23
Hydraulic Oil Tank Assembly 24–25
Engine Assembly..... 26–29
Electric Device Assembly 30–31
Clutch (Vibration) Assembly 32–33
Vibrator Assembly 34–35
Upper Control Arm Assembly..... 36–37
Lower Control Arm Assembly..... 38–39

Honda GX390 Series Engines

Cylinder Head Assembly 40–41
Cylinder Barrel Assembly 42–43
Crankcase Cover Assembly 44–45
Crankshaft Assembly..... 46–47
Piston Assembly 48–49
Camshaft Assembly..... 50–51
Recoil Starter Assembly 52–53
Fan Cover Assembly..... 54–55
Carburetor Assembly..... 56–59
Air Cleaner Assembly (Standard) 60–61
Air Cleaner Assembly (Cyclone)..... 62–63
Muffler Assembly 64–65
Fuel Tank Assembly..... 66–67
Flywheel Assembly..... 68–69
Ignition Coil Assembly 70–71
Starter Motor Assembly..... 72–73
Control Assembly 74–75
Control Box Assembly 76–77
Label Assembly 78–79

NOTICE

Specifications and part numbers are subject to change without notice.

NOTES

EXPLANATION OF CODE IN REMARKS COLUMN

The following section explains the different symbols and remarks used in the Parts section of this manual. Use the help numbers found on the back page of the manual if there are any questions.

> ***NOTICE***
>
> The contents and part numbers listed in the parts section are subject to change **without notice**. Multiquip does not guarantee the availability of the parts listed.

SAMPLE PARTS LIST

NO.	PART NO.	PART NAME	QTY.	REMARKS
1	12345	BOLT	1	INCLUDES ITEMS W/%
2%		WASHER, 1/4 IN.		NOT SOLD SEPARATELY
2%	12347	WASHER, 3/8 IN.	1	MQ-45T ONLY
3	12348	HOSE	A/R	MAKE LOCALLY
4	12349	BEARING	1	S/N 2345B AND ABOVE

NO. Column

Unique Symbols — All items with same unique symbol (@, #, +, %, or >) in the number column belong to the same assembly or kit, which is indicated by a note in the "Remarks" column.

Duplicate Item Numbers — Duplicate numbers indicate multiple part numbers, which are in effect for the same general item, such as different size saw blade guards in use or a part that has been updated on newer versions of the same machine.

> ***NOTICE***
>
> When ordering a part that has more than one item number listed, check the remarks column for help in determining the proper part to order.

PART NO. Column

Numbers Used — Part numbers can be indicated by a number, a blank entry, or TBD.

TBD (To Be Determined) is generally used to show a part that has not been assigned a formal part number at the time of publication.

A blank entry generally indicates that the item is not sold separately or is not sold by Multiquip. Other entries will be clarified in the "Remarks" Column.

QTY. Column

Numbers Used — Item quantity can be indicated by a number, a blank entry, or A/R.

A/R (As Required) is generally used for hoses or other parts that are sold in bulk and cut to length.

A blank entry generally indicates that the item is not sold separately. Other entries will be clarified in the "Remarks" Column.

REMARKS Column

Some of the most common notes found in the "Remarks" Column are listed below. Other additional notes needed to describe the item can also be shown.

Assembly/Kit — All items on the parts list with the same unique symbol will be included when this item is purchased.

Indicated by:

"INCLUDES ITEMS W/(unique symbol)"

Serial Number Break — Used to list an effective serial number range where a particular part is used.

Indicated by:

"S/N XXXXX AND BELOW"
"S/N XXXX AND ABOVE"
"S/N XXXX TO S/N XXX"

Specific Model Number Use — Indicates that the part is used only with the specific model number or model number variant listed. It can also be used to show a part is NOT used on a specific model or model number variant.

Indicated by:

"XXXXX ONLY"
"NOT USED ON XXXX"

"Make/Obtain Locally" — Indicates that the part can be purchased at any hardware shop or made out of available items. Examples include battery cables, shims, and certain washers and nuts.

"Not Sold Separately" — Indicates that an item cannot be purchased as a separate item and is either part of an assembly/kit that can be purchased, or is not available for sale through Multiquip.

MRH800GS VIBRATORY ROLLER

1 to 3 units

Qty.	P/N	Description
1	954404893	FILTER, WATER TANK
2	954001380	ELEMENT, HYDRAULIC OIL
2	070503000	V-BELT, ENGINE
1	956100024	THROTTLE WIRE
1	954300342	CAP, WATER TANK
1	955200030	HEAD LAMP ASSY.
2	070100381	V-BELT, VIBRATOR ASSY.

NOTICE

Part numbers on this Suggested Spare Parts list may supersede/replace the part numbers shown in the following parts lists.

HONDA GX390K1SM32/GX390U1SM32/ GX390UT2SM32/ GX390UT2SCM ENGINES

1 to 3 units

Qty.	P/N	Description
3◊♣❖	9807956846	SPARK PLUG, NKG, BPR6ES
3♦	0650140480	SPARK PLUG, NKG, BPR6ES
3◊♣❖	17210ZE3505	ELEMENT, AIR CLEANER
3♦	17210Z1C781	ELEMENT, AIR CLEANER
3◊♣❖	17218ZE3505	FILTER OUTER, FOAM
3♦	17218Z1C780	FILTER OUTER, FOAM
1◊♣	17620ZH7023	CAP, FUEL TANK
1❖	17620Z4H030	CAP, FUEL TANK
1♦	17620Z4H900	CAP, FUEL TANK
1◊	17672ZE2W01	FUEL FILTER
1♣❖♦	17672Z4H000	FUEL FILTER
1◊♣	34150ZH7003	ALERT UNIT, OIL

NOTICE

◊ Honda GX390K1SM32

♣ Honda GX390U1SM32

❖ Honda GX390UT2SM32

♦ Honda GX390UT2SCM1

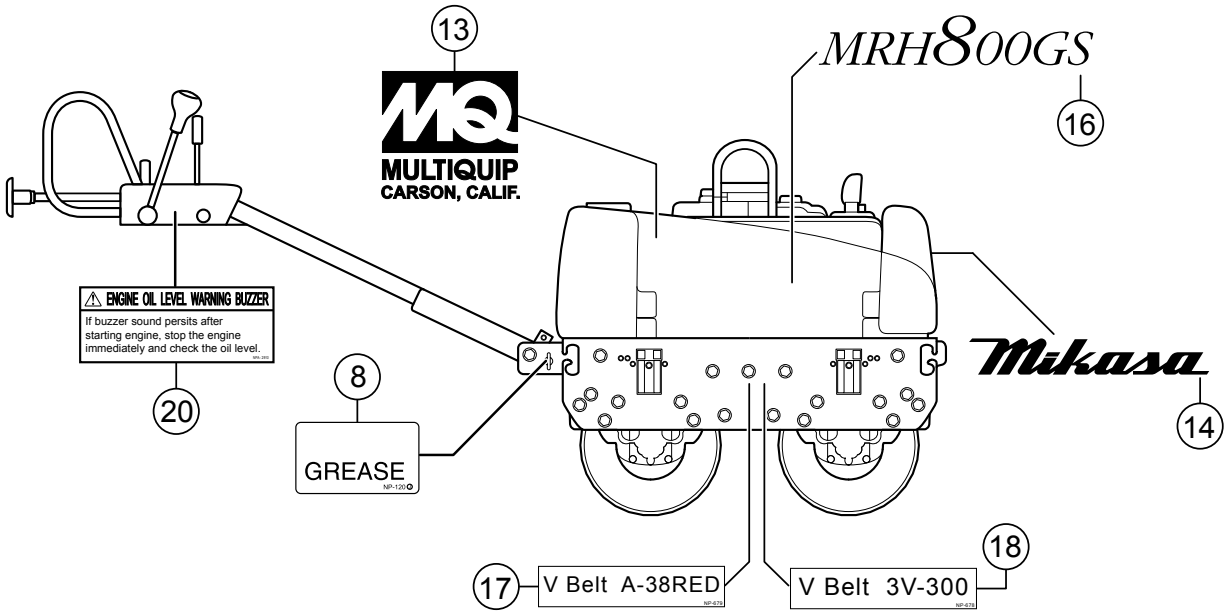
13
MULTIQUIP
CARSON, CALIF.
MRH800GS
16
ENGINE OIL LEVEL WARNING BUZZER
If buzzer sound persits after starting engine, stop the engine immediately and check the oil level.
20
8
GREASE
NP-120
Mikasa
14
17
V Belt A-38RED
NP-678
V Belt 3V-300
NP-678
18

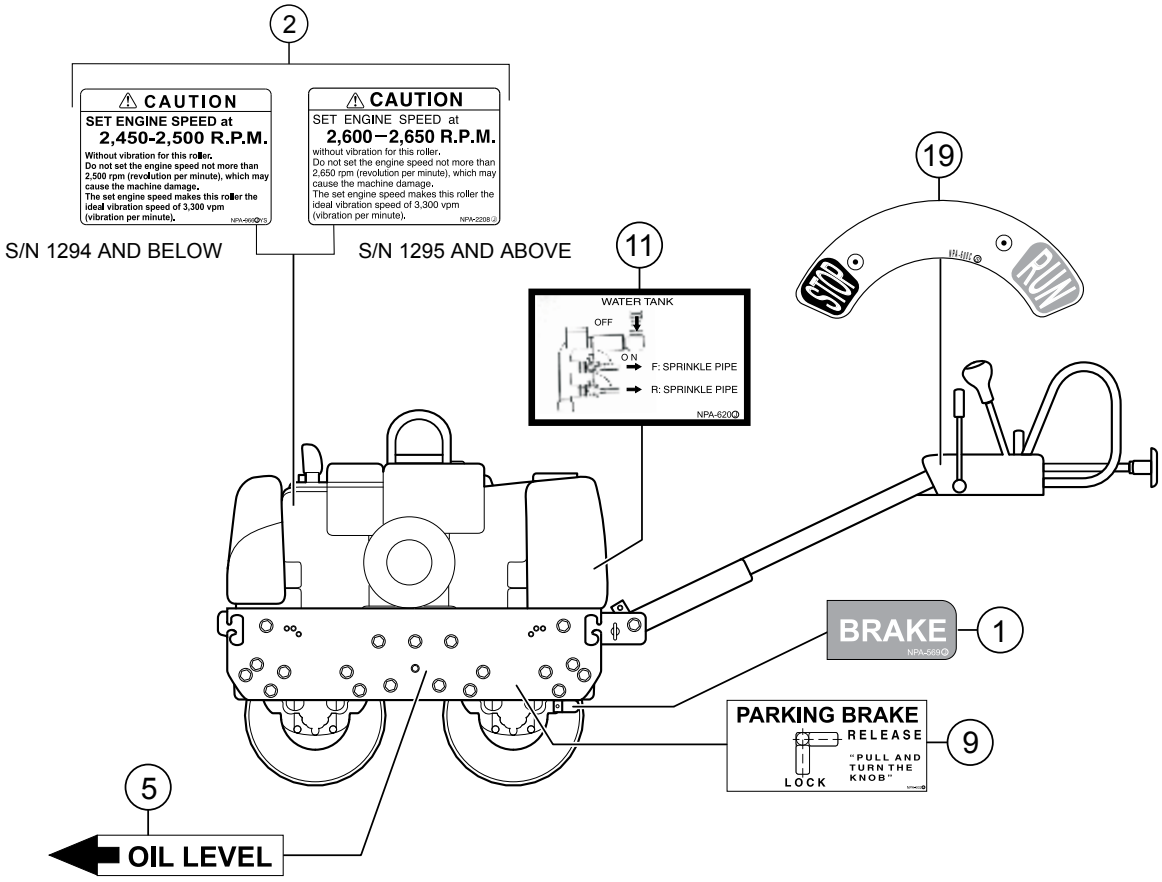
2
CAUTION
SET ENGINE SPEED at
2,450-2,500 R.P.M.
Without vibration for this roller.
Do not set the engine speed not more than 2,500 rpm (revolution per minute), which may cause the machine damage.
The set engine speed makes this roller the ideal vibration speed of 3,300 vpm (vibration per minute).
NPA-499
CAUTION
SET ENGINE SPEED at
2,600−2,650 R.P.M.
without vibration for this roller.
Do not set the engine speed not more than 2,650 rpm (revolution per minute), which may cause the machine damage.
The set engine speed makes this roller the ideal vibration speed of 3,300 vpm (vibration per minute).
NPA-2208
S/N 1294 AND BELOW
S/N 1295 AND ABOVE
19
STOP
RUN
11
WATER TANK
OFF
ON
F: SPRINKLE PIPE
R: SPRINKLE PIPE
NPA-620
BRAKE
NPA-559
1
PARKING BRAKE
RELEASE
LOCK
"PULL AND TURN THE KNOB"
9
5
OIL LEVEL

NO.	PART NO.	PART NAME	QTY.	REMARKS
1	920205690	DECAL, BRAKE LEVER	1	NPA-569
2	920209660	DECAL, CAUTION - ENG. SPEED, NPA-966	1	S/N D1294 AND BELOW
2	920222080	DECAL, CAUTION - ENG. SPEED, NPA-2208	1	S/N D1295 AND ABOVE
5	920101480	DECAL, CHECK OIL LEVEL	1	NP-148
8	920100120	DECAL, GREASE POINT, NP-120	1	REPLACES P/N 920101200
9	920208070	DECAL, PARKING BREAK	1	NPA-807
11	920206200	DECAL, WATER TANK SPRINKLE PIPE	1	NPA-620
13	920201910	DECAL, MULTIQUIP - CARSON	1	NPA-191
14	920101510	DECAL, MIKASA	1	NP-151
16	920207610	DECAL, MRH-800GS	1	NPA-761
17	920106790	DECAL, V-BELT (A-38RED)	1	NP-679
18	920106780	DECAL, V-BELT (3V-300)	1	NP-678
19	920206080	DECAL, STOP-RUN	1	NPA-608
20	920202910	DECAL, BUZZER, ENGINE OIL LEVEL	1	NPA-291

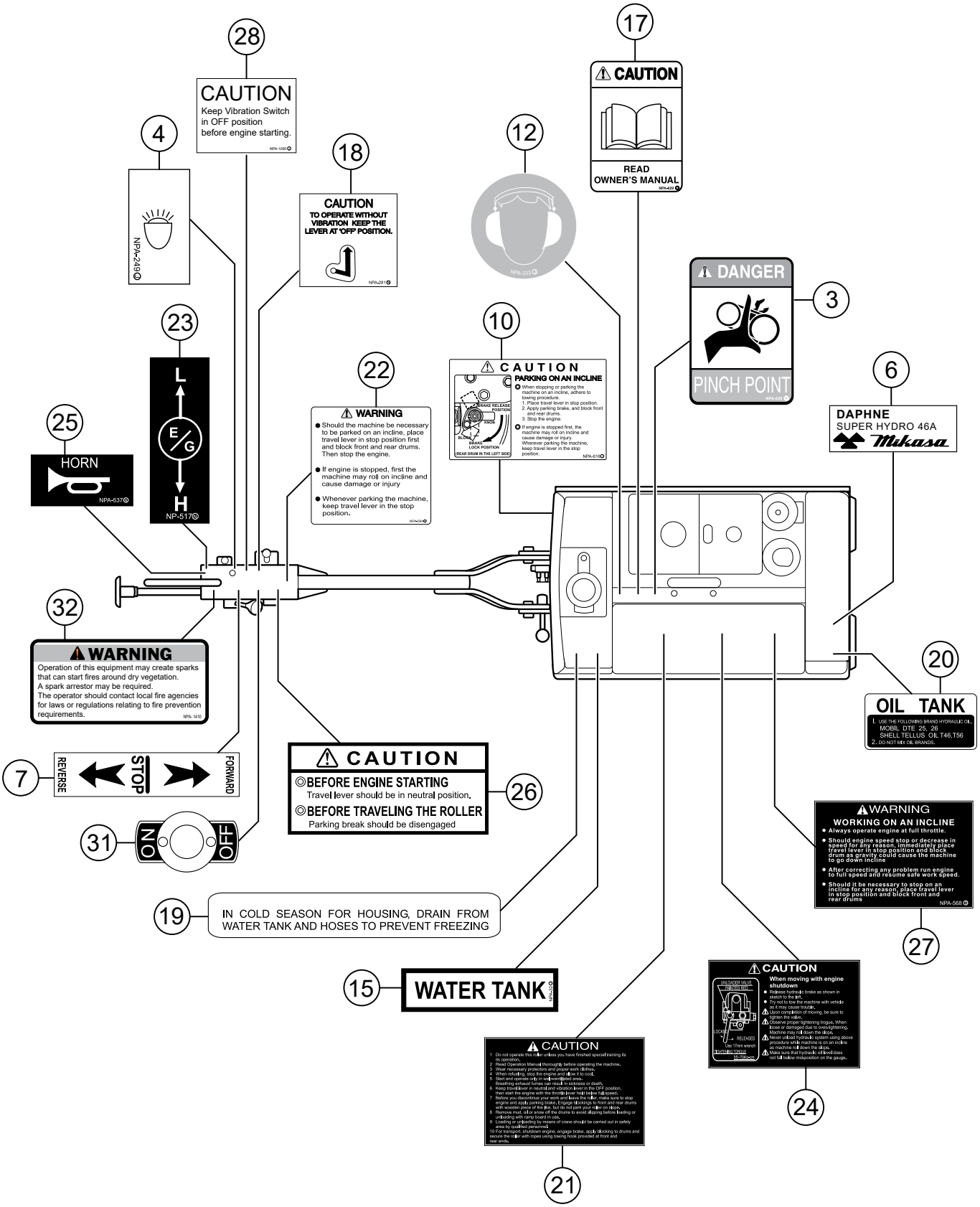
28
CAUTION
Keep Vibration Switch in OFF position before engine starting.
NPA-1280
4
NPA-249
18
CAUTION
TO OPERATE WITHOUT VIBRATION KEEP THE LEVER AT 'OFF' POSITION.
NPA-281
12
NPA-333
17
CAUTION
READ OWNER'S MANUAL
NPA-422
DANGER
PINCH POINT
NPA-428
3
23
L
E/G
H
NP-517
10
CAUTION
PARKING ON AN INCLINE
When stopping or parking the machine on an incline, adhere to towing procedure.
1. Place travel lever in stop position.
2. Apply parking brake, and block front and rear drums.
3. Stop the engine.
If engine is stopped first, the machine may roll on incline and cause damage or injury.
Wherever parking the machine, keep travel lever in the stop position.
BRAKE RELEASE POSITION
KNOB
NORMAL
BRAKE LOCK POSITION
REAR DRUM IN THE LEFT SIDE
NPA-618
22
WARNING
Should the machine be necessary to be parked on an incline, place travel lever in stop position first and block front and rear drums. Then stop the engine.
If engine is stopped, first the machine may roll on incline and cause damage or injury
Whenever parking the machine, keep travel lever in the stop position.
NPA-428
6
DAPHNE
SUPER HYDRO 46A
Mikasa
25
HORN
NPA-537
32
WARNING
Operation of this equipment may create sparks that can start fires around dry vegetation.
A spark arrestor may be required.
The operator should contact local fire agencies for laws or regulations relating to fire prevention requirements.
NPA-1416
20
OIL TANK
1. USE THE FOLLOWING BRAND HYDRAULIC OIL.
MOBIL DTE 25, 26
SHELL TELLUS OIL T46,T56
2. DO NOT MIX OIL BRANDS.
7
REVERSE
STOP
FORWARD
CAUTION
BEFORE ENGINE STARTING
Travel lever should be in neutral position.
BEFORE TRAVELING THE ROLLER
Parking break should be disengaged
26
31
ON
OFF
WARNING
WORKING ON AN INCLINE
Always operate engine at full throttle.
Should engine speed stop or decrease in speed for any reason, immediately place travel lever in stop position and block drum as gravity could cause the machine to go down incline
After correcting any problem run engine to full speed and resume safe work speed.
Should it be necessary to stop on an incline for any reason, place travel lever in stop position and block front and rear drums
NPA-568
27
19
IN COLD SEASON FOR HOUSING, DRAIN FROM WATER TANK AND HOSES TO PREVENT FREEZING
15
WATER TANK
CAUTION
When moving with engine shutdown
Release hydraulic brake as shown in sketch to the left.
Try not to tow the machine with vehicle as it may cause trouble.
Upon completion of moving, be sure to tighten the valve.
Observe proper tightening torque. When loose or damaged due to over-tightening.
Machine may roll down the slope.
Never unload hydraulic system using above procedure while machine is on an incline as machine roll down the slope.
Make sure that hydraulic oil level does not fall below indication on the gauge.
UNLOADER VALVE
OPEN
LOCKED
RELEASED
Use 17mm wrench
TORQUE 14.7N·m
24
CAUTION
1 Do not operate this roller unless you have finished special training its operation.
2 Read Operation Manual thoroughly before operating the machine.
3 Wear necessary protectors and proper work clothes.
4 When refueling, stop the engine and allow it to cool.
5 Start and operate only in well-ventilated area.
Breathing exhaust fumes can result in sickness or death.
6 Keep travel lever in neutral and vibration lever in the OFF position, then start the engine with the throttle lever held in full speed.
7 Operate throttle lever gently. Sudden throttle lever shifting may stop engine and apply parking brake. Engine stoppage to front and rear drums with wooden piece of the line, but do not park your roller on slope.
8 Remove mud, oil or snow off the drums to avoid slipping before loading or unloading with ramp board in use.
9 Loading or unloading by means of crane should be carried out in safety area by qualified personnel.
10 For transport, shutdown engine, engage brake, apply blocking to drums and secure the roller with ropes using towing hook provided at front and rear ends.
21

NO.	PART NO.	PART NAME	QTY.	REMARKS
3	920206280	DECAL, DANGER - PINCH POINT	1	NPA-628
4	920102490	DECAL, LIGHT SWITCH	1	NP-249
6	920207480	DECAL, SHELL TELLIS OIL	1	
7	920108070	DECAL, FORWARD/REVERSE LEVER	1	NP-807
10	920206160	DECAL, CAUTION - INCLINE PARKING	1	NPA-616
12	920203330	DECAL, HEARING PROTECTION	1	NPA-333
15	920200320	DECAL, WATER TANK	1	NPA-32
17	920206290	DECAL, CAUTION - OWNERS MANUAL	1	NPA-629
18	920212600	DECAL, CAUTION - SWITCH ON/OFF VIB	1	NPA-281
19	920104280	DECAL, FREEZING PREVENTION	1	NP-428
20	920213000	DECAL, OIL TANK	1	NPA-1300
21	920202870	DECAL, CAUTION - GENERAL, NPA-287	1	REPLACES P/N 920207870
22	920205640	DECAL, WARNING - INCLINE PARKING	1	NPA-564
23	920105170	DECAL, THROTTLE	1	NP-517
24	920202860	DECAL, CAUTION - MOVING PLT. NPA-286	1	REPLACES P/N 920207860
25	920201450	DECAL, HORN	1	NPA-145
26	920202920	DECAL, CAUTION - BRAKE	1	NPA-292
27	920205680	DECAL, WARNING - INCLINE PLT., NPA-568	1	REPLACES P/N 920207880
28	920106760	DECAL, STOP-RUN-START	1	NP-676
31	920205080	DECAL, ON-OFF	1	NPA-508
32	920214100	DECAL, E/G FIRE WARNING	1	NPA-1410

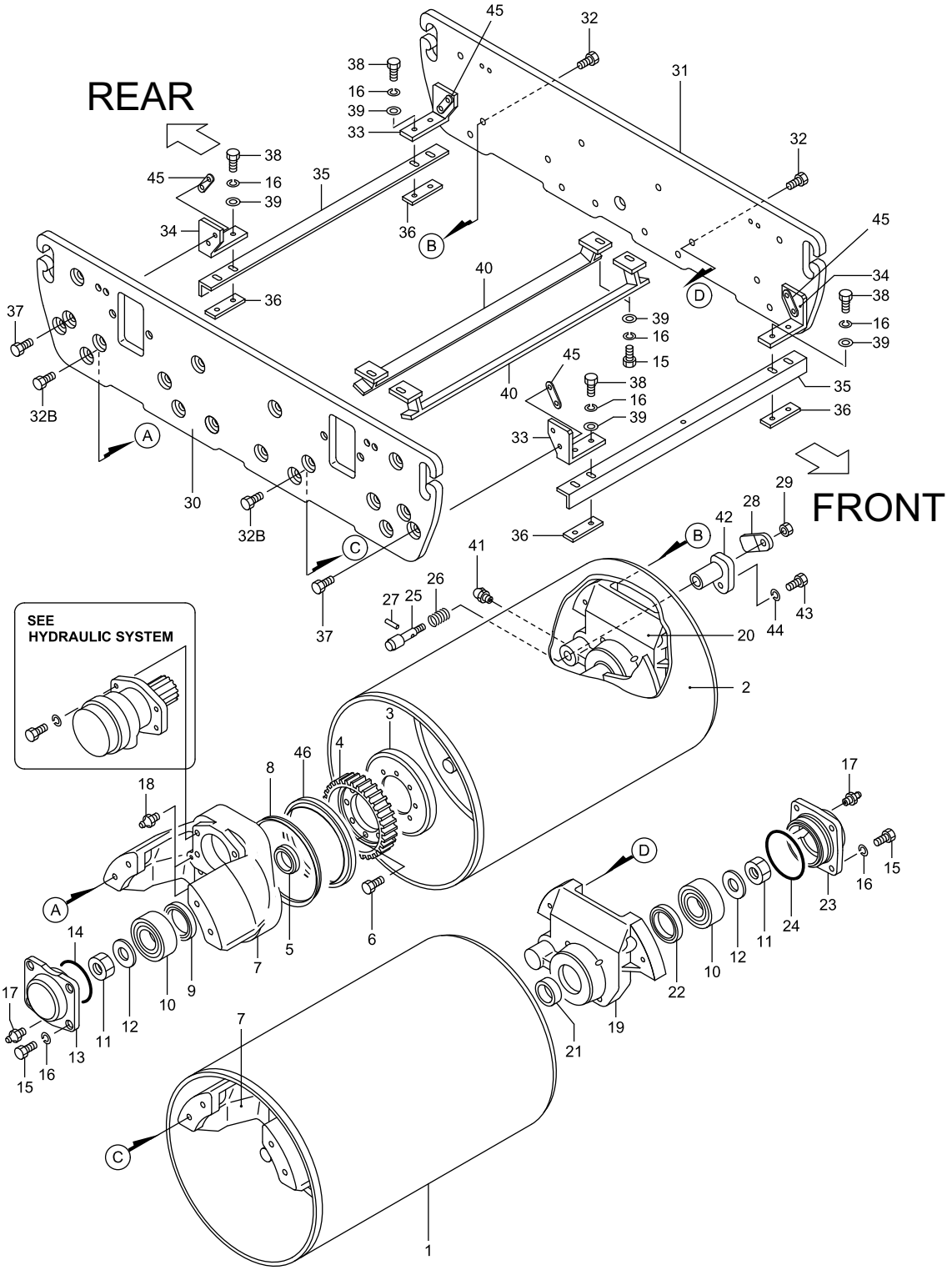
REAR
FRONT
SEE
HYDRAULIC SYSTEM
A
B
C
D
1
2
3
4
5
6
7
8
9
10
11
12
13
14
15
16
17
18
19
20
21
22
23
24
25
26
27
28
29
30
31
32
32B
33
34
35
36
37
38
39
40
41
42
43
44
45
46

NO.	PART NO.	PART NAME	QTY.	REMARKS
1	515119290	DRUM	1	
2	515119300	DRUM	1	
3	515346670	GEAR PLATE	2	
4	515334000	GEAR (39)	2	
5	509429660	COLLAR 405510	2	
6	012210035	BOLT 10X35	16	REPLACES P/N 001221035
7	515118960	DRUM BRACKET (R)	2	
8	515460540	V-RING V-200L	2	
9	060605020	OIL SEAL	2	
10	047110030	BEARING	4	
11	020130240	NUT M30	4	
12	031130450	WASHER M30	4	
13	515334010	BEARING COVER (R)	2	
14	050100850	O-RING	2	
15	0105091025	BOLT 10X25	20	REPLACES P/N 001221025
16	030210250	WASHER M10	28	
17	505015060	GREASE FITTING	4	REPLACES P/N 301010100
18	171010120	GREASE FITTING	4	
19	515113000	DRUM BRACKET (L)	1	
20	515113014	DRUM BRACKET (LB)	1	
21	506425670	COLLAR 405520	2	
22	060705010	OIL SEAL	2	
23	515334040	BEARING COVER (L)	2	
24	050300950	O-RING	2	
25	515446960	LOCK PIN, BRAKE	1	
26	515446950	SPRING, BRAKE	1	
27	025405025	SPRING PIN 5X25	1	
28	515446970	KNOB, BRAKE	1	
29	020310080	NUT M10	1	REPLACES P/N 020410060
30	515117040	SIDE PLATE (R)	1	
31	515114350	SIDE PLATE (L)	1	
32	012214030	BOLT 14X30	8	REPLACES P/N 001221430
32B	001121630	BOLT 16X30	8	
33	515341930	BRACKET (A), SCRAPER	2	
34	515341940	BRACKET (B), SCRAPER	2	
35	515334020	SCRAPER (OUT)	2	
36	515447510	MOUNT NUT, SCRAPER	4	
37	001121435	BOLT 14X35	8	
38	012010030	BOLT 10X30	8	REPLACES P/N 001221030
39	031110160	WASHER M10	12	
40	515334030	SCRAPER (IN)	2	
41	959010330	GREASE FITTING	1	
42	515340410	SOCKET(BRAKE)	1	
43	0105091025	BOLT 10X25	1	REPLACES P/N 001221025
44	030210250	WASHER, LOCK M10	1	
45	515455840	MOUNT NUT	4	
46	069960530	DUST SEAL	2	

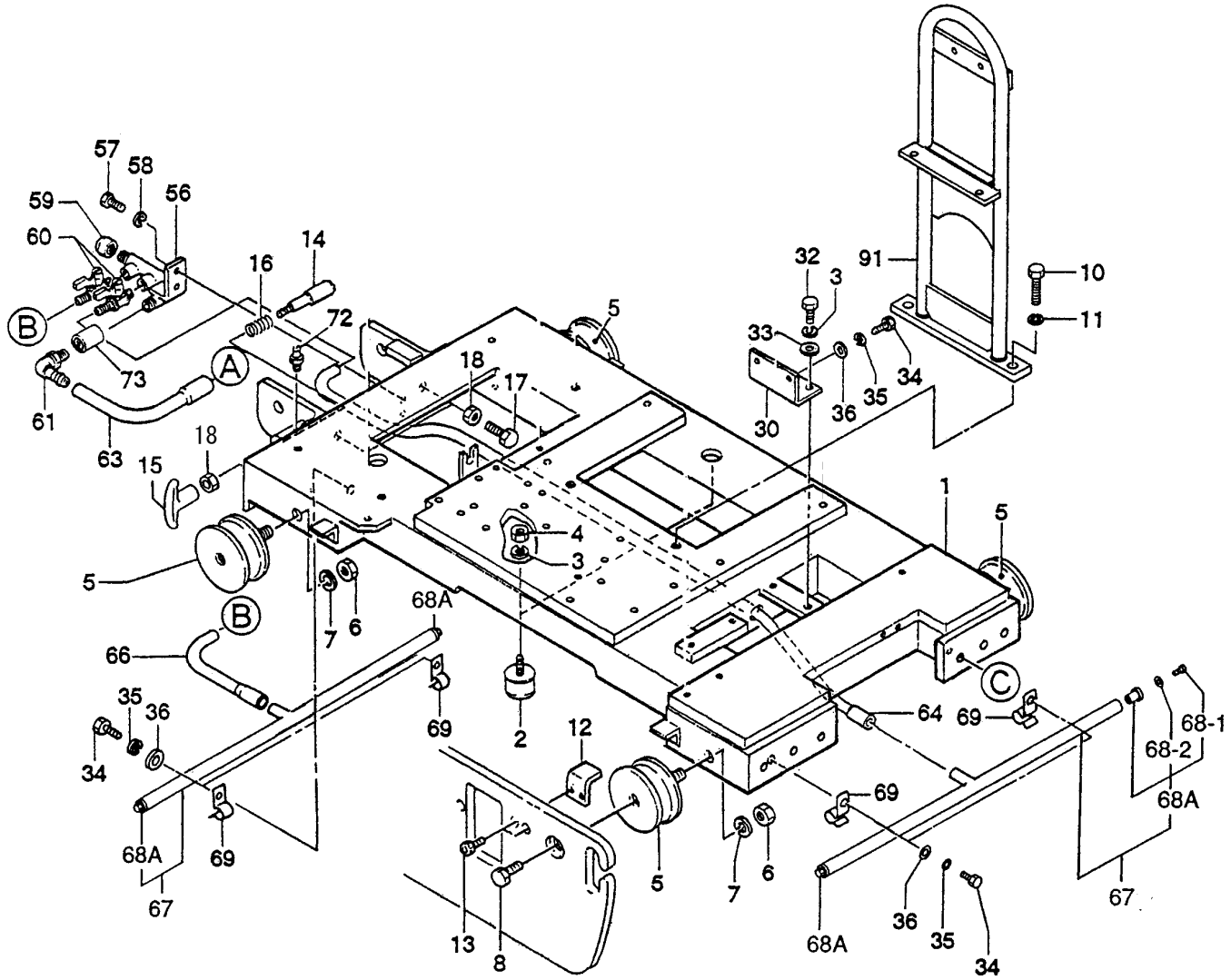
57
58
56
59
60
14
16
72
B
73
A
61
63
18
15
5
B
66
35
36
34
68A
69
67
68A
69
7
6
18
17
5
4
3
2
12
13
8
5
7
6
32
3
91
33
30
36
35
34
10
11
1
5
C
64
69
69
68A
36
35
34
68A
67
68-1
68-2
68A
67

NO.	PART NO.	PART NAME	QTY.	REMARKS
1	515119150	BASE	1	
2	939010010	SHOCK ABSORBER, STOPPER 45	2	
3	030210250	WASHER, LOCK M10	9	
4	020310080	NUT M10	3	
5	930710031	SHOCK ABSORBER	4	
6	020316130	NUT M16	4	
7	030216400	WASHER, LOCK M16	4	
8	001221625	BOLT 16X25	4	
10	001221440	BOLT 14X40	2	
11	030214350	WASHER, LOCK M14	2	
12	515447010	SAFETY GUARD	4	
13	096208010	SOCKET HEAD BOLT 8X15	8	REPLACES P/N 001520815
14	517459710	HANDLE STOPPER	1	
15	959007140	T- KNOB (M12)	1	
16	517459700	SPRING/HANDLE	1	
17	012012030	BOLT 12X30	2	REPLACES P/N 001221230
18	0039312000	NUT M12	3	REPLACES P/N 020312100
30	515334100	STAY, COVER (F)	1	
32	012210020	BOLT 10X20	5	REPLACES P/N 001221020
33	031110160	WASHER, FLAT M10	7	
34	0105050616	BOLT 6X15	8	REPLACES P/N 001220615
35	030206150	WASHER, LOCK M6	8	
36	952404470	WASHER, FLAT M6	8	REPLACES P/N 031106100
56	515334050	SUPPORT, WATER COCK	1	
57	014208020	BOLT 8X20	2	REPLACES P/N 001220820
58	030208200	WASHER, LOCK M8	2	
59	509010010	CAP 3/8	1	
60	954403241	COCK PT1/4	2	
61	954405660	ELBOW 3/8X12	1	
63	515446980	WATER HOSE (T-V) 300L	1	
64	515446990	WATER HOSE (F) 1200L	1	
66	515447470	WATER HOSE (R) 260L	1	
67	515910040	SPRINKLING PIPE ASSY. MRH	2	INCLUDES ITEMS W/$
68A$	515910050	CAP ASSY., W/BOLT, WASHER	4	INCLUDES ITEMS W/#
68-1#	011206020	BOLT 6X20	4	REPLACES P/N 001220620
68-2#	952404470	WASHER, FLAT M6	4	REPLACES P/N 031106100
69	515449900	CLAMP	4	
72	351010050	GREASE FITTING, 6X1	1	
73	954001590	SOCKET PT 3/8-3/8	1	
91	515213600	HOOK	1	

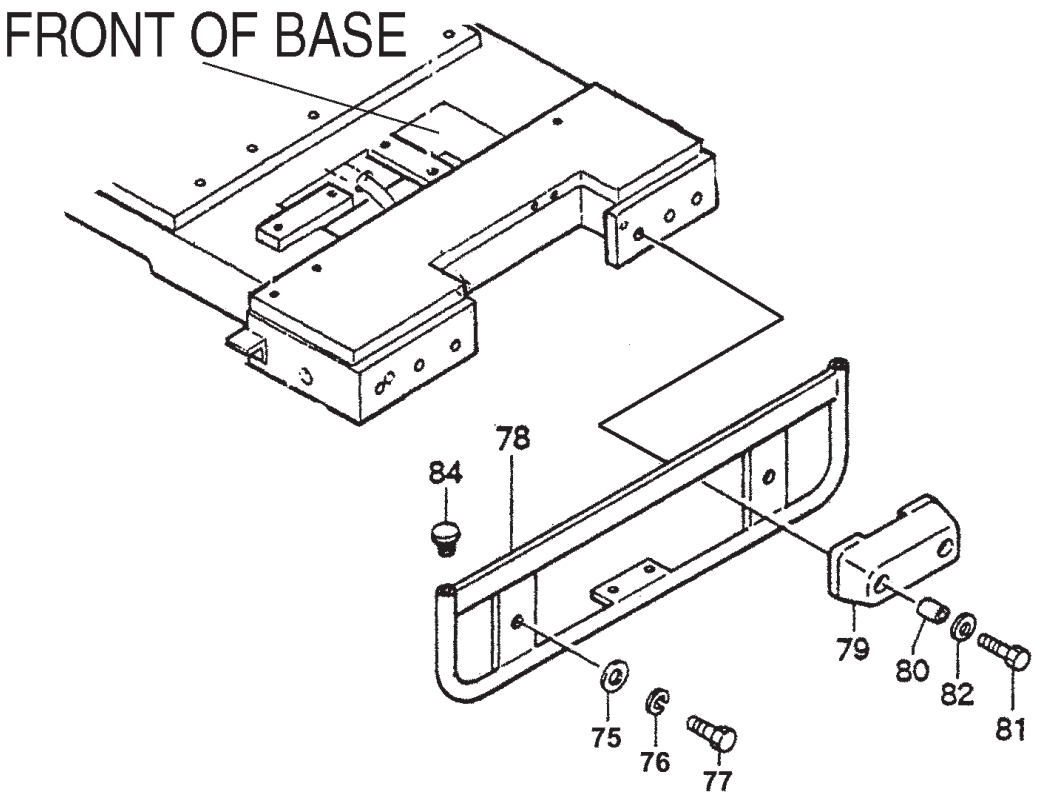
FRONT OF BASE
78
84
79
80
82
81
75
76
77

NO.	PART NO.	PART NAME	QTY.	REMARKS
75	031110160	FLAT WASHER, M10	2	
76	030210250	LOCK WASHER, M10	2	
77	012210035	BOLT 10X35MM	2	REPLACES P/N 001221035
78	515336200	FRONT GUARD	1	
79	515336210	BUMPER	2	
80	515449720	SPACER, BUMPER	4	
81	012210040	BOLT 10X40	4	REPLACES P/N 001221040
82	031110160	WASHER, FLAT M10	4	
84	953405940	PIPE INSERT	2	

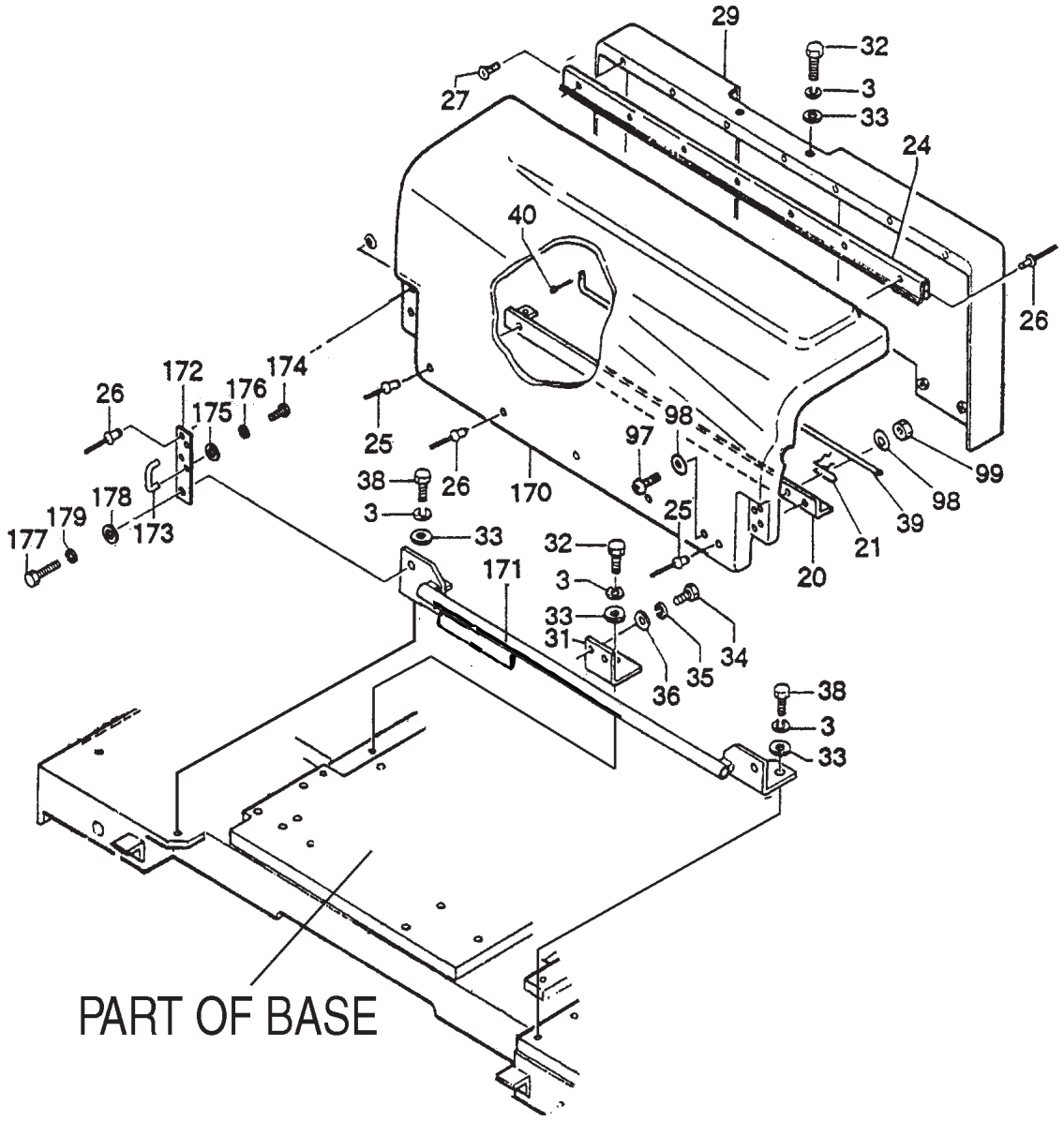
29
32
3
33
24
27
40
26
172
174
176
26
175
25
98
97
99
38
26
170
98
178
179
173
177
3
33
25
39
21
32
171
20
3
33
31
34
35
36
38
3
33
PART OF BASE

NO.	PART NO.	PART NAME	QTY.	REMARKS
3	030210250	WASHER, LOCK M10	9	
20	515336250	SUPPORT, COVER	1	
21	515449890	ROD HOLDER	1	
24	515334600	RUBBER HINGE	1	
25	515010090	RIVET	2	
26	515010100	RIVET	14	
27	092004008	SCREW 4X8	7	
29	515113900	COVER	1	
31	515447030	STAY, COVER (R)	1	
32	012210020	BOLT 10X20	5	REPLACES P/N 001221020
33	031110160	WASHER, FLAT M10	7	
34	0105050616	BOLT 6X15	8	REPLACES P/N 001220615
35	030206150	WASHER, LOCK M6	8	
36	952404470	WASHER, FLAT M6	8	REPLACES P/N 031106100
38	0105091025	BOLT 10X25	2	REPLACES P/N 001221025
39	515447380	ROD, COVER	1	
40	025910060	SNAP PIN	1	
97	001000401	SCREW 4X16	1	REPLACES P/N 091004016
98	58042	WASHER, FLAT M4	2	REPLACES P/N 031104080
99	0030004000	NUT M4	1	REPLACES P/N 020304030
170	515910100	COVER ASSY.	1	
171	515213870	STAY, COVER (EXP)	1	
172	515450780	HANDLE BRACKET	2	
173	515450790	HANDLE (COVER)	2	
174	0010004016	SCREW 4X15	4	REPLACES P/N 091004015
175	58042	WASHER, FLAT M4	4	REPLACES P/N 031104080
176	030204100	WASHER, LOCK M4	4	
177	011008015	BOLT 8X15	2	REPLACES P/N 001220815
178	0401450080	WASHER, FLAT M8	2	REPLACES P/N 031108160
179	030208200	WASHER, LOCK M8	2	

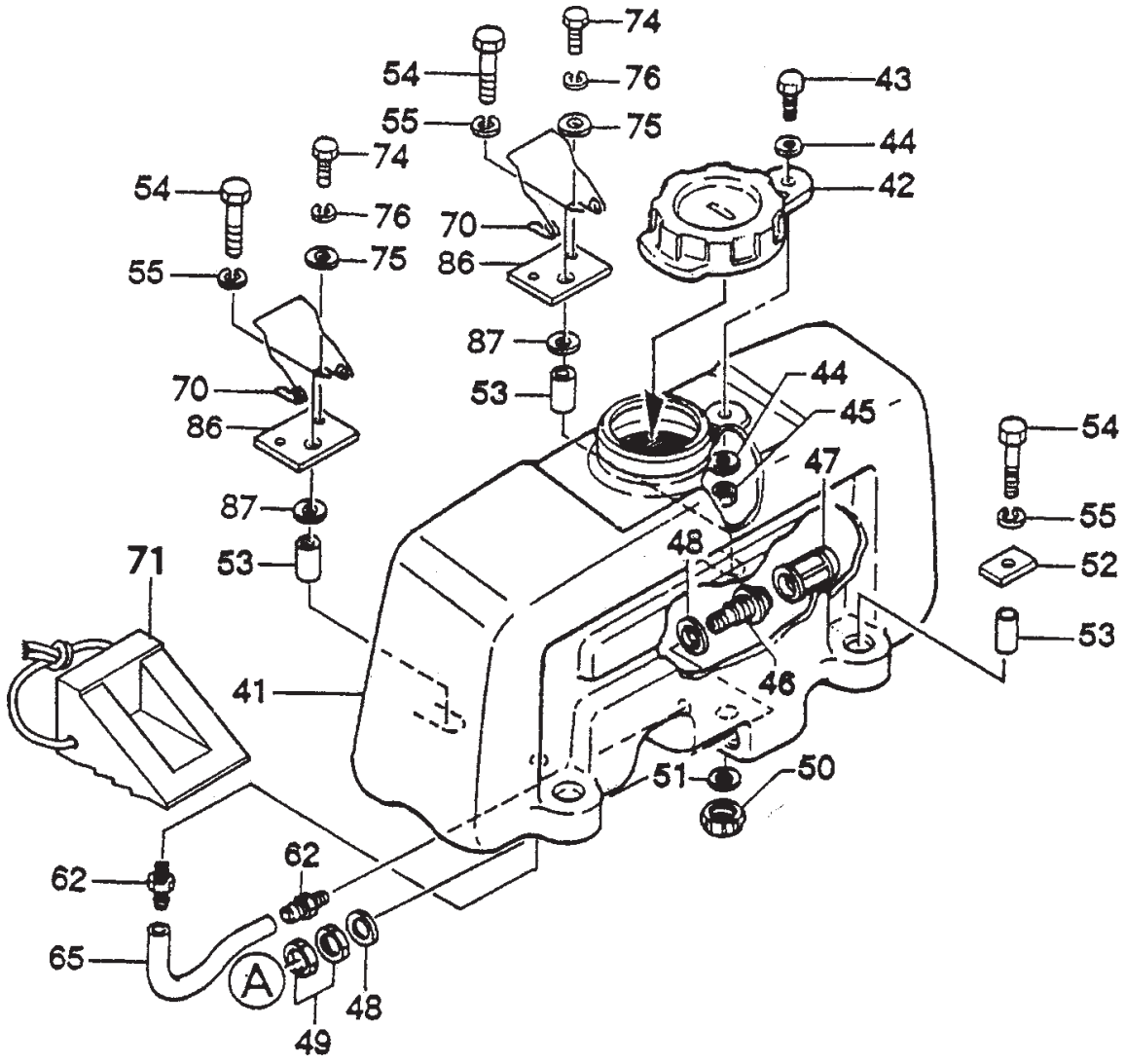
74
54
76
43
55
75
44
74
42
54
76
70
75
86
55
87
44
70
53
45
86
54
47
87
55
48
71
53
52
53
41
46
51
50
62
62
65
A
48
49

NO.	PART NO.	PART NAME	QTY.	REMARKS
41	515119400	WATER TANK 10.3 GAL./39 LITERS	1	
42	954300342	CAP, WATER TANK	1	
43	001241030	BOLT 10X30	1	
44	033910010	WASHER	2	
45	022910180	NYLON NUT M10	1	
46	954404910	HOSE JOINT	1	
47	954404893	FILTER, TANK	1	
48	953404900	PACKING	2	
49	959404880	NUT 3/4"	2	
50	506403990	CAP	2	
51	953404000	PACKING, CAP	1	
52	506434680	STOPPER, FRONT	2	
53	506434690	SPACER, WATER TANK	4	
54	001221253	BOLT 12X65	4	
55	030212300	WASHER, LOCK M12	4	
62	954405680	CONNECTOR 1/4X10	2	
65	516454950	WATER HOSE	1	
70	515449870	HOLDER, STOPPER	2	
71	517338540	STOPPER	2	
74	011006010	BOLT 6X10	4	REPLACES P/N 001220610
75	952404470	WASHER, FLAT M6	4	REPLACES P/N 031106100
76	030206150	WASHER, LOCK M6	4	
86	515449880	HOLDER (R)	2	
87	952405950	WASHER	2	

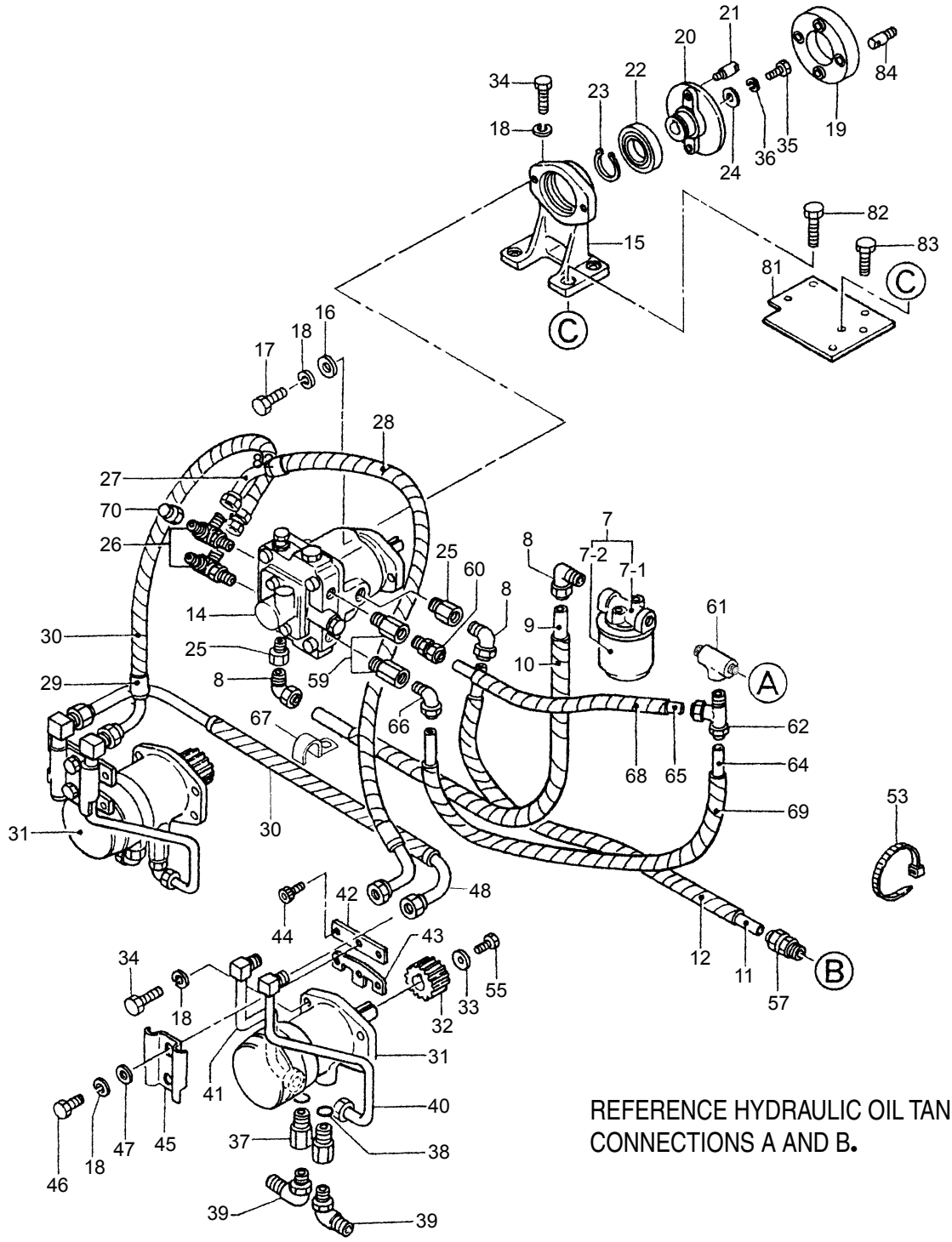

REFERENCE HYDRAULIC OIL TANK ASSY. FOR CONNECTIONS A AND B.

NO.	PART NO.	PART NAME	QTY.	REMARKS
7	954001350	OIL FILTER	1	INCLUDES ITEMS W/#
7-1#	954001390	FILTER HEAD	1	
7-2#	954001380	ELEMENT, HYDRAULIC OIL	1	
8	954001530	ELBOW LIN-1/2-PT3/8	3	
9	954002310	TUBE 9.6-12.7-325L	1	
10	959020014	SPIRAL TUBE 12D-350L	1	
11	954001511	TUBE 9.6-12.7-360	1	
12	959020014	SPIRAL TUBE 12-500L	1	
14	515010110	OIL PUMP	1	
15	515114390	BRACKET	1	
16	952404110	COLLAR	2	
17	012210035	BOLT 10X35	2	REPLACES P/N 001221035
18	030210250	WASHER, LOCK M10	22	
19	515334070	COUPLING	1	
20	515334080	FLANGE	1	
21	515447020	COUPLING PIN	2	
22	046006009	BEARING	1	
23	080200450	STOP RING	1	
24	952400450	WASHER	1	
25	954001460	BUSHING 3/8"	2	
26	954001850	ELBOW 3/8-1/4X2	2	
27	954001830	OIL HOSE ML90-ML90X560 BS	1	
28	959020013	SPIRAL TUBE 11D-600L	1	
29	954001840	OIL HOSE ML90-1005X600 BS	1	
30	955404270	SPIRAL TUBE/11D-700L	2	
31	515348100	OIL MOTOR	2	
32	515454330	GEAR, PINION 12	2	
33	952400130	WASHER	2	
34	012210035	BOLT 10X35	14	REPLACES P/N 001221035
35	0105050616	BOLT 6X15	1	REPLACES P/N 001220615
36	030206150	WASHER, LOCK M6	1	
37	515447130	JOINT 1/2-3/8-31	4	
38	050210180	O-RING	4	
39	512010120	JOINT, LLM-UE-10X3/8-B	4	
40	515447110	PIPE, OM-A-E	2	
41	515447120	PIPE, OM-B-E	2	
42	515447160	HOLDER, UPPER	2	
43	515447170	HOLDER, LOWER	2	
44	014208020	SOCKET HEAD BOLT 8X20	8	REPLACES P/N 001520820
45	515447140	COVER, PIPE	2	
46	012210020	BOLT 10X20	4	REPLACES P/N 001221020
47	031110160	WASHER, FLAT M10	8	
48	954002630	OIL HOSE ML90-700BS	1	

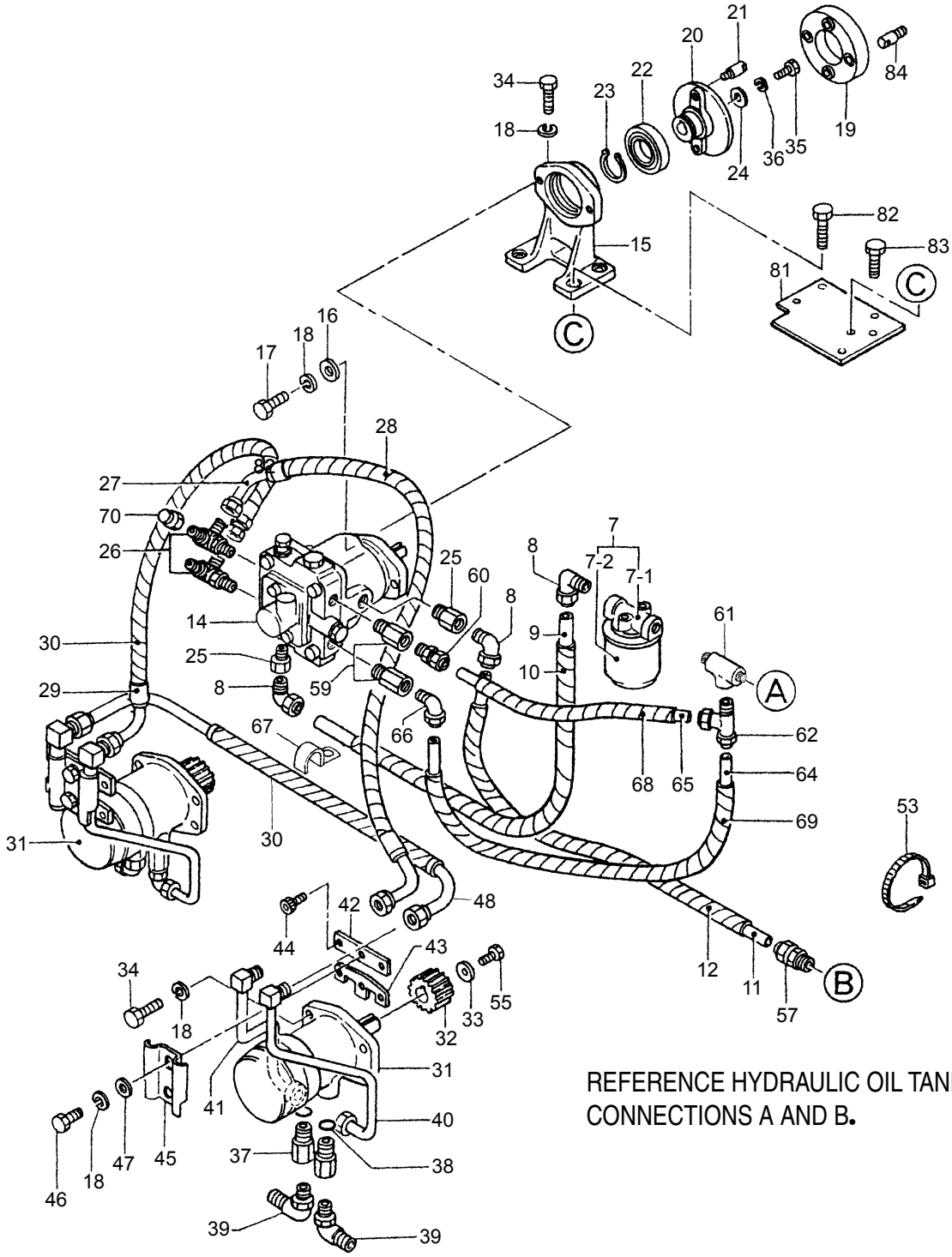

REFERENCE HYDRAULIC OIL TANK ASSY. FOR CONNECTIONS A AND B.

NO.	PART NO.	PART NAME	QTY.	REMARKS
53	507010110	CLAMP	8	
55	014208020	BOLT 8X20	2	REPLACES P/N 001220820
57	954001520	ADAPTER CIN-1/2" XPT 3/8"	1	
59	515335300	CHECK VALVE 7/16"	2	
60	954001090	ADAPTER CIN-3/8"-PT1/4"	1	
61	954002660	3/8" TEE JOINT	1	
62	954001620	FITTING, TEE STIN 3/8"-PT 3/8"	1	
64	954090004	TUBE 9.5-7-405L	1	
65	954090005	TUBE 9.5-7-305L	1	
66	954001100	ELBOW LIN-3/8-PT1/4"	1	
67	454010020	CLAMP	12	
68	959021810	SPIRAL TUBE 6D-350L	1	
69	959021810	SPIRAL TUBE 6D-510L	1	
70	954001040	CAP PF1/4"	2	
81	515335451	SPACER	1	
82	012210040	BOLT 10X40	4	REPLACES P/N 001221040
83	012010030	BOLT 10X30	2	REPLACES P/N 001221030
84	515447020	COUPLING PIN	2	

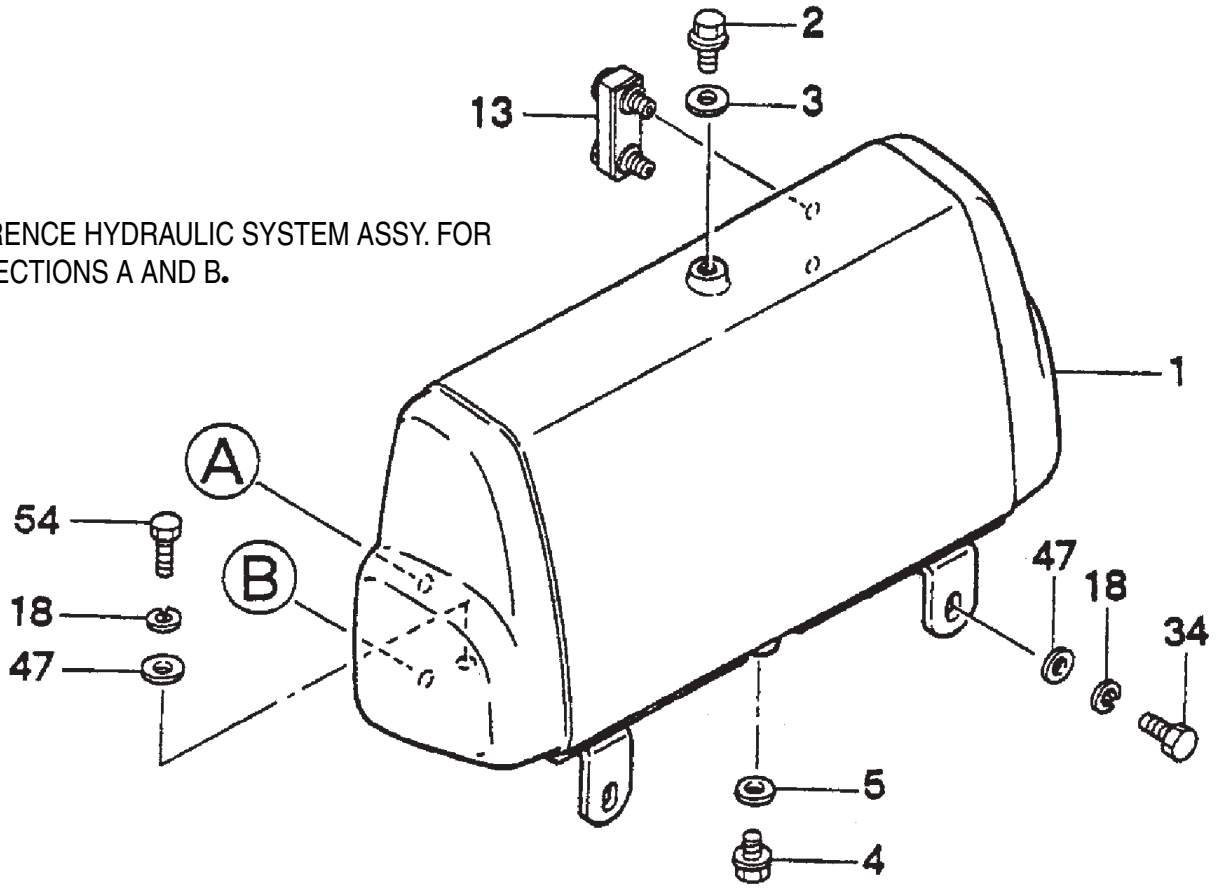

REFERENCE HYDRAULIC SYSTEM ASSY. FOR CONNECTIONS A AND B.

HYDRAULIC OIL TANK ASSY.

NO.	PART NO.	PART NAME	QTY.	REMARKS
1	515118050	OIL TANK	1	
2	953405840	DRAIN PLUG M18	1	
3	953402930	COPPER PACKING	1	
4	953400270	PLUG 1/4X14	1	
5	953405260	PACKING 1/4	1	
13	955407500	OIL GAUGE	1	
18	030210250	WASHER, LOCK M10	22	
34	012210035	BOLT 10X35	14	REPLACES P/N 001221035
47	031110160	WASHER, FLAT M10	8	
54	0105091025	BOLT 10X25	2	REPLACES P/N 001221025

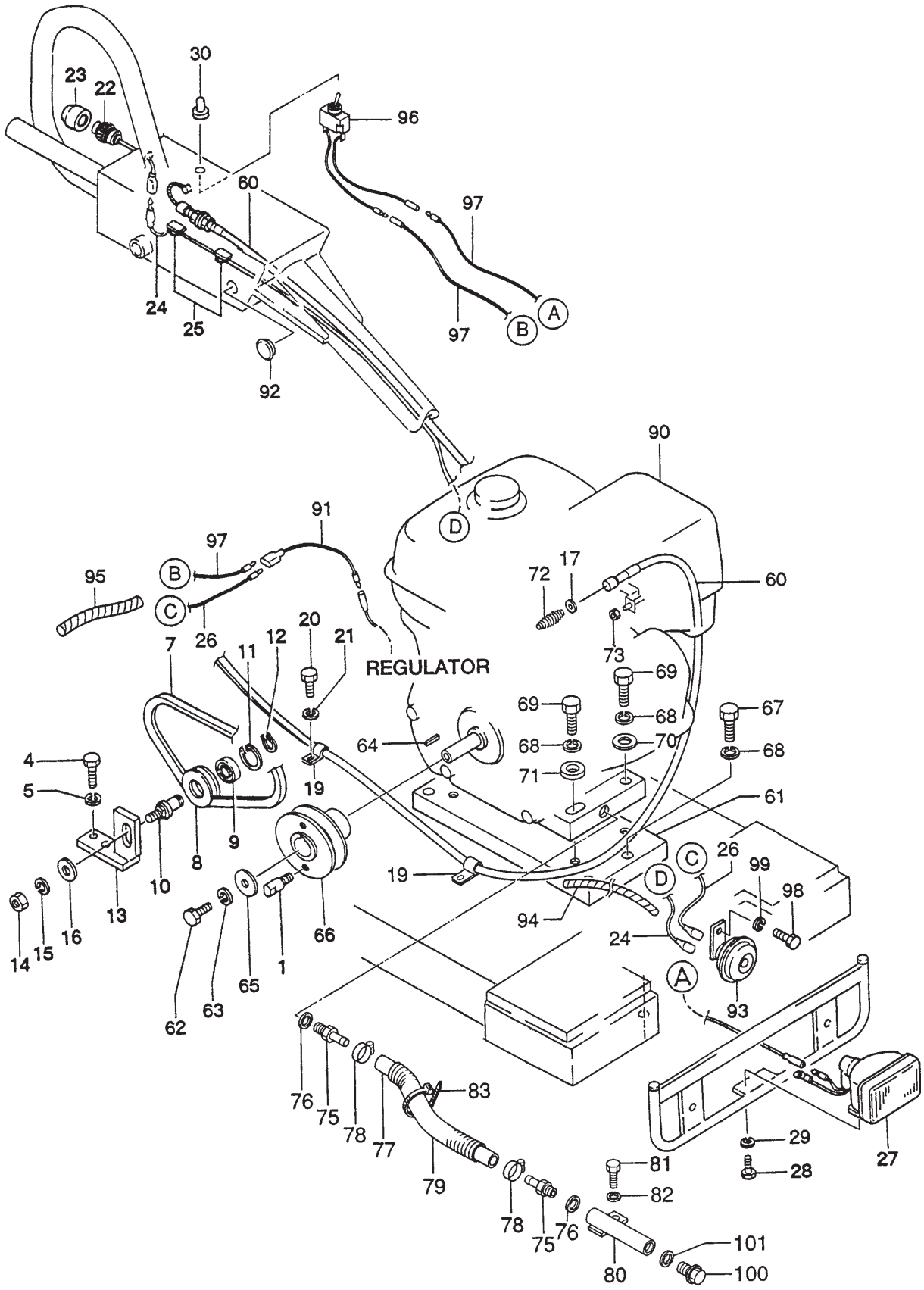
30
23
22
96
60
97
24
25
97
A
B
92
90
91
97
D
95
B
C
26
20
21
12
11
7
REGULATOR
72
17
60
73
69
69
68
67
68
70
68
64
71
4
5
19
61
8
9
10
13
16
14
15
19
C
26
99
98
D
94
24
66
1
65
62
63
A
93
76
75
78
77
83
79
29
27
28
81
82
78
75
76
101
80
100

NO.	PART NO.	PART NAME	QTY.	REMARKS
1	515447020	COUPLING PIN	2	
4	012010030	BOLT 10X30	2	REPLACES P/N 001221030
5	030210250	WASHER, LOCK M10	2	
7	070503000	V-BELT, 3V-300	1	
8	515447050	TIGHTENER PULLEY	1	
9	046006004	BEARING	1	
10	515447060	SHAFT TIGHTENER	1	
11	080100420	STOP RING	1	
12	080200200	STOP RING	1	
13	515334180	HOLDER, TIGHTENER	1	
14	020314110	NUT M14	1	
15	030214350	WASHER, LOCK M14	1	
16	031114260	WASHER, FLAT M14	1	
17	58042	WASHER, FLAT M4	1	REPLACES P/N 031104080
19	501011190	CLAMP	2	REPLACES P/N 607010040
20	011006010	BOLT 6X10	2	REPLACES P/N 001220610
21	030206150	WASHER, LOCK M6	2	
22	955400800	SWITCH, HORN BUTTON ASSY.	1	
23	955405980	COVER, HORN BUTTON	1	
24	515447320	CORD, HORN	1	
25	955405710	WIRE CLAMP	2	
26	515449860	HARNESS	1	
27	955200030	HEAD LAMP ASSY. 12V@25W	1	
28	0105050616	BOLT 6X15	2	REPLACES P/N 001220615
29	030206150	WASHER, LOCK M6	2	
30	304402600	CAP	1	
60	956100024	THROTTLE WIRE	1	
61	515337100	ENGINE SPACER	1	
62	011208025	BOLT 8X25	1	REPLACES P/N 001220825
63	030208200	WASHER, LOCK M8	1	
64	90741889810	KEY 7X7X33	1	REPLACES P/N 951400520
65	952400690	WASHER 9X35X4.5	1	
66	515338220	ENGINE PULLEY	1	
67	012210040	BOLT 10X40	4	REPLACES P/N 001221040
68	030210250	WASHER, LOCK M10	8	
69	012210040	BOLT 10X40	4	REPLACES P/N 001421040
70	031110160	WASHER, FLAT M10	2	
71	952404110	COLLAR	2	
72	402010110	COIL SPRING	1	REPLACES P/N 301010950
73	0030004000	NUT M4	1	REPLACES P/N 020304030
75	90131ZE3790	DRAIN JOINT	2	REPLACES P/N 953406230
76	031112230	DRAIN WASHER	2	REPLACES P/N 953406240

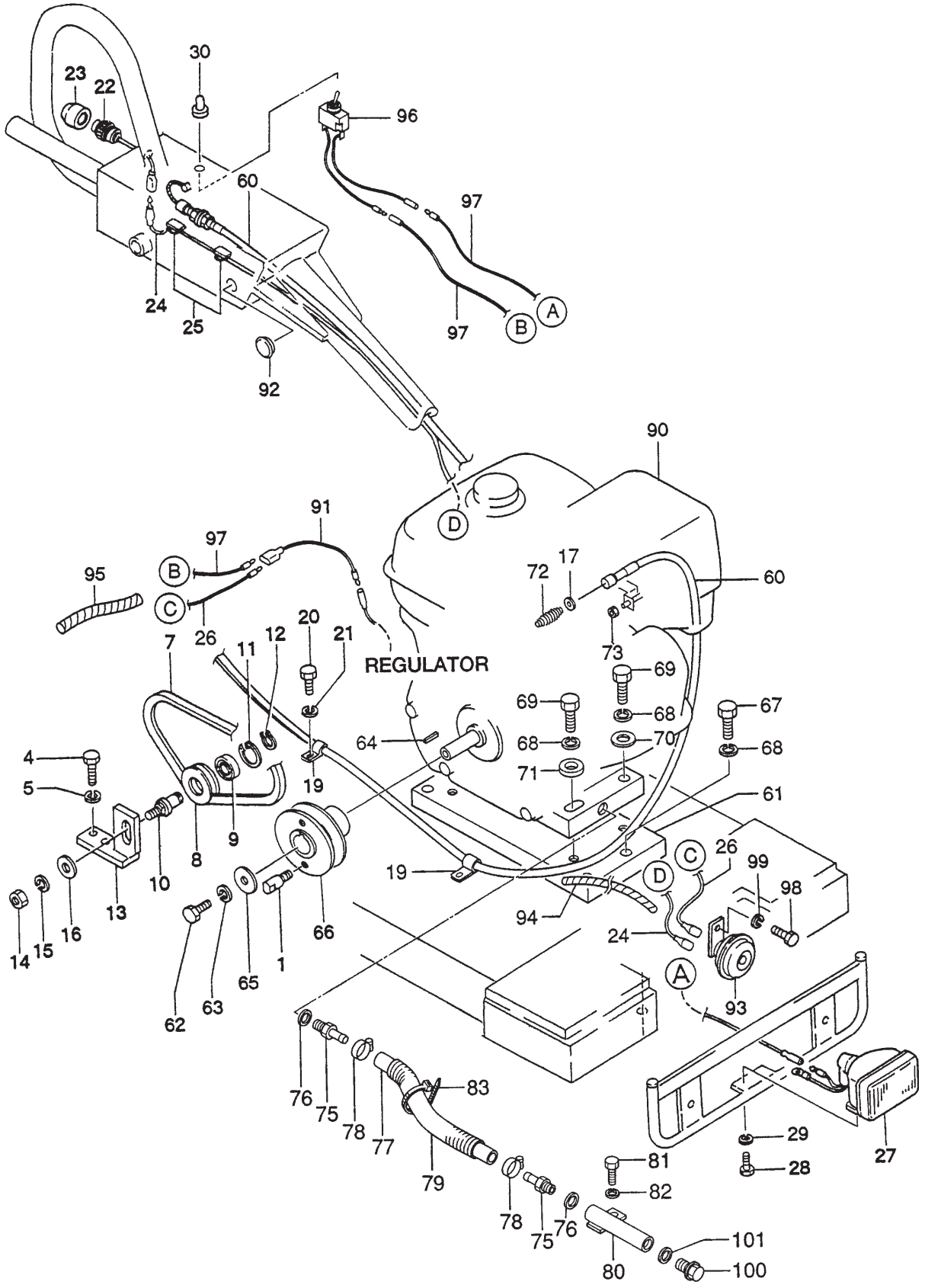
30
23
22
96
60
97
24
25
97
A
B
92
90
91
D
97
95
B
C
26
17
72
60
20
21
7
11
12
REGULATOR
73
69
69
68
67
64
68
70
68
4
5
19
71
61
8
9
10
13
19
26
C
99
D
98
94
24
14
15
16
66
1
65
63
62
A
93
76
75
78
77
83
79
29
27
81
28
82
78
75
76
101
80
100

NO.	PART NO.	PART NAME	QTY.	REMARKS
77	954001760	OIL HOSE	1	
78	954406080	CLIP, OIL HOSE	2	
79	959026002	TUBE	1	
80	515450941	JOINT	1	REPLACES P/N 515450940
81	014208020	BOLT 8X20	1	REPLACES P/N 001220820
82	030208200	WASHER, LOCK M8	1	
83	506010070	CLAMP	3	
90	912239009	ENGINE GX390K1SM32	1	REPLACES P/N 912239006 S/N G2326 ~ P4357
90	912239009	ENGINE GX390U1SM32	1	S/N P4386 ~ W7268
90	912239014	ENGINE GX390UT2SM32	1	S/N W7319 ~ B1030
90	912239024	ENGINE GX390UT2SCM1	1	S/N C1253 ~ ABOVE
91	515451010	WIRE HARNESS	1	
92	515010070	GROMMET	1	
93	955300420	HORN ASSY.,DC12V	1	
94	959021812	SPIRAL TUBE	1	
95	959021810	SPIRAL TUBE	1	REPLACES P/N 959021811
96	515449910	SWITCH CP, W/CORD	1	
97	515449920	CORD, LAMP	2	
98	011006010	BOLT 6X10	1	REPLACES P/N 001220610
99	030206150	WASHER, LOCK M6	1	
100	90131896650	BOLT, DRAIN PLUG	1	REPLACES P/N 90131883000
101	031112230	WASHER DRAIN PLUG M12	1	REPLACES P/N 9410912000

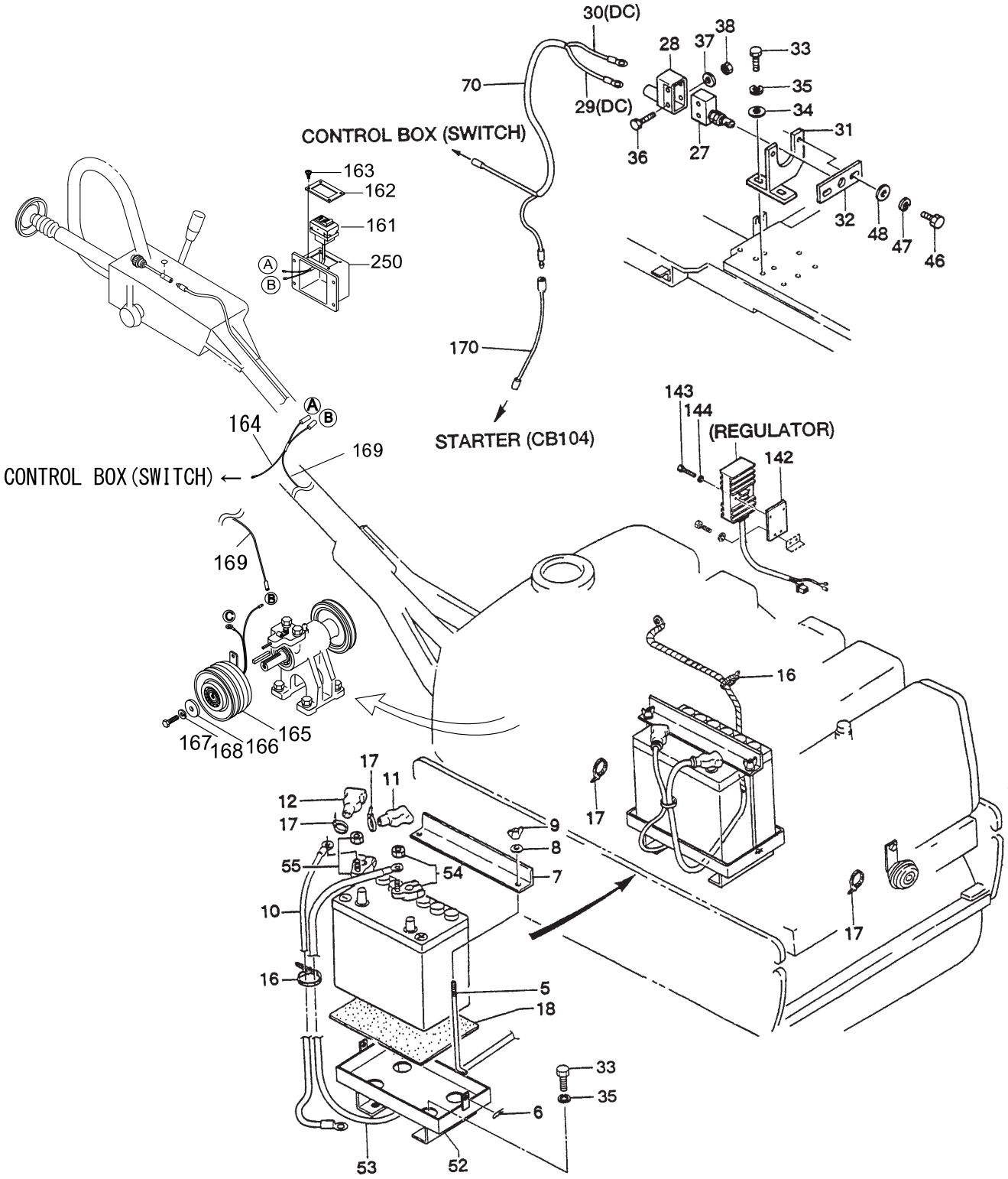
30(DC)
38
28
37
33
70
35
29(DC)
34
CONTROL BOX (SWITCH)
31
36
27
163
162
161
32
48
47
46
250
170
143
144
164
(REGULATOR)
STARTER (CB104)
169
142
CONTROL BOX(SWITCH)
169
16
165
167
168
166
17
11
12
17
9
8
55
54
7
10
17
16
5
18
33
35
6
53
52

NO.	PART NO.	PART NAME	QTY.	REMARKS
5	515448210	ROD, BATTERY	2	
6	025910060	COTTER PIN	2	REPLACES P/N 607010080
7	516455640	HOLDER, BATTERY	1	REPLACES P/N 515447370
8	952404470	WASHER, FLAT M6	2	REPLACES P/N 031106100
9	0037806000	WING NUT M6	2	REPLACES P/N 022410616
10	515447360	BATTERY CORD (-)	1	
11	055300500	TERMINAL COVER (+)	1	
12	955300470	TERMINAL COVER (-)	1	REPLACES P/N 955300510
16	507010110	CLAMP	3	
17	506010070	CLAMP	10	
18	601303150	RUBBER PLATE	1	
27	955405910	MICRO-SWITCH	1	
28	955405450	COVER, MICROSWITCH	1	
29	515449840	READ CORD	1	
30	515449850	READ CORD	1	
31	515337110	HOLDER, MICRO-SWITCH	1	
32	515449230	PLATE, MICRO-SWITCH	1	
33	012210020	BOLT 10X20	6	REPLACES P/N 001221020
34	031110160	WASHER, FLAT M10	2	
35	030210250	WASHER, LOCK M10	6	
36	001200430	BOLT 4X30	2	
37	58042	WASHER, FLAT M4	2	REPLACES P/N 031104080
38	022710405	NYLON NUT M4	2	
46	0105050616	BOLT 6X15	2	REPLACES P/N 001220615
47	030206150	WASHER, LOCK M6	2	
48	952404470	WASHER, FLAT M6	2	REPLACES P/N 031106100
52	516337580	BASE, BATTERY	1	
53	515448530	BATTERY CORD (+) 1100L	1	REPLACES P/N 515450740
54	955300480	BATTERY TERMINAL (+)	1	
55	955300490	BATTERY TERMINAL (-)	1	
70	515453230	READ CORD (M-SWITCH) 550L- 2	1	
142	515451000	BRACKET, REGULATOR	1	
143	011606025	BOLT 6X25	2	REPLACES P/N 001220625
144	030206150	WASHER, LOCK M6	2	
161	516217920	SEESAW SWITCH/MAG.CLUTCH	1	
162	516458960	SWITCH PLATE	1	
163	091505015	SCREW 5X15, WASHER, LOCK	4	
164	515364090	WIRE HARNESS	1	
165	515349890	MAGNETIC CLUTCH	1	
166	515464040	WASHER 11X42X4	1	
167	001221020	BOLT 10X20	1	
168	030210250	WASHER, LOCK M10	1	
169	515349790	WIRE HARNESS/MAG. CLUTCH	1	
170	515450930	WIRE HARNESS 300L	1	
250	516353210	SWITCH BOX/MAGNET. CLUTCH	1	

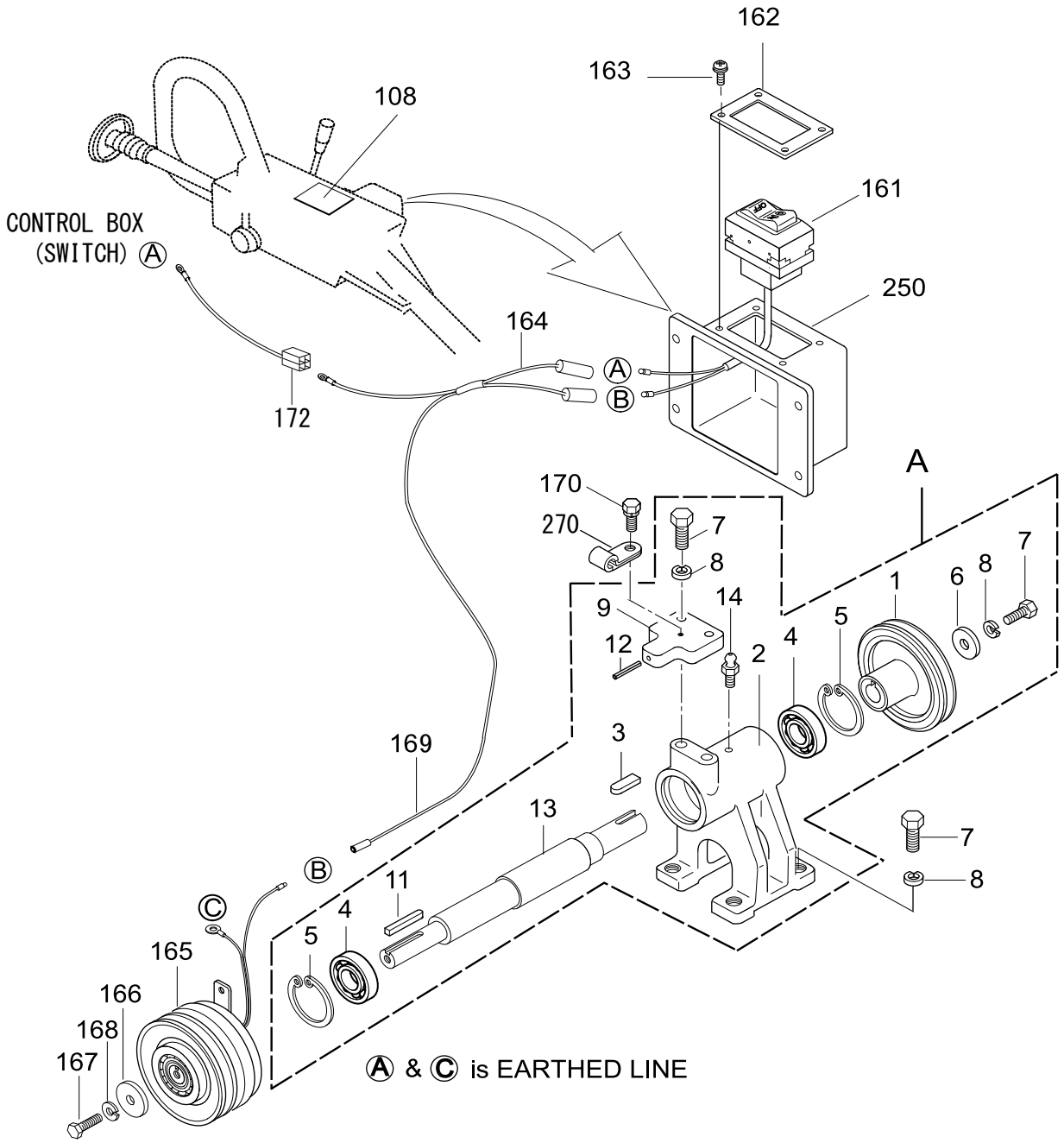
162
163
108
161
CONTROL BOX
(SWITCH) Ⓐ
250
164
Ⓐ
Ⓑ
172
A
170
270
7
8
7
8
6
1
9
14
5
12
4
2
3
169
13
7
Ⓑ
11
8
Ⓒ
4
5
165
166
168
167
Ⓐ & Ⓒ is EARTHED LINE

CLUTCH (VIBRATION) ASSY.

NO.	PART NO.	PART NAME	QTY.	REMARKS
A	515910140	CLUTCH, BRACKET CP	1	INCLUDES ITEMS W/#
1#	515463550	COUNTER PULLEY	1	
2#	515212980	COUNTER BRACKET	1	
3#	951403020	KEY 7X7X26	1	
4#	043006206	BEARING 6206V	2	
5#	080100620	STOP RING	2	
6#	952402470	COLLAR 11X36X6	1	
7#	012010030	BOLT 10X30	7	REPLACES P/N 001221030
8#	030210250	WASHER, LOCK M10	7	
9#	516458360	CLUTCH STAY	1	
11#	951400280	KEY 5X5X38	1	
12#	025406036	SPRING PIN 6X36	1	
13#	515349900	COUNTER SHAFT	1	
14#	505015060	GREASE FITTING 1/8"	1	REPLACES P/N 301010100
161	516217920	SEESAW SWITCH/MAG, CLUTCH	1	
162	516458960	SWITCH PLATE	1	
163	091505015	SCREW 5X15, WASHER, LOCK	4	
164	515364090	WIRE HARNESS	1	
165	515349890	MAGNETIC CLUTCH	1	REPLACES P/N 515149890
166	515464040	WASHER 11X42X4	1	
167	012210020	BOLT 10X20	1	REPLACES P/N 001221020
168	030210250	WASHER, LOCK M10	1	
169	515349790	WIRE HARNESS/MAG. CLUTCH	1	
170	011006010	BOLT 6X10, WASHER, LOCK	1	REPLACES P/N 002210610
172	515451010	WIRE HARNESS	1	
270	2267510103	CLAMP	1	

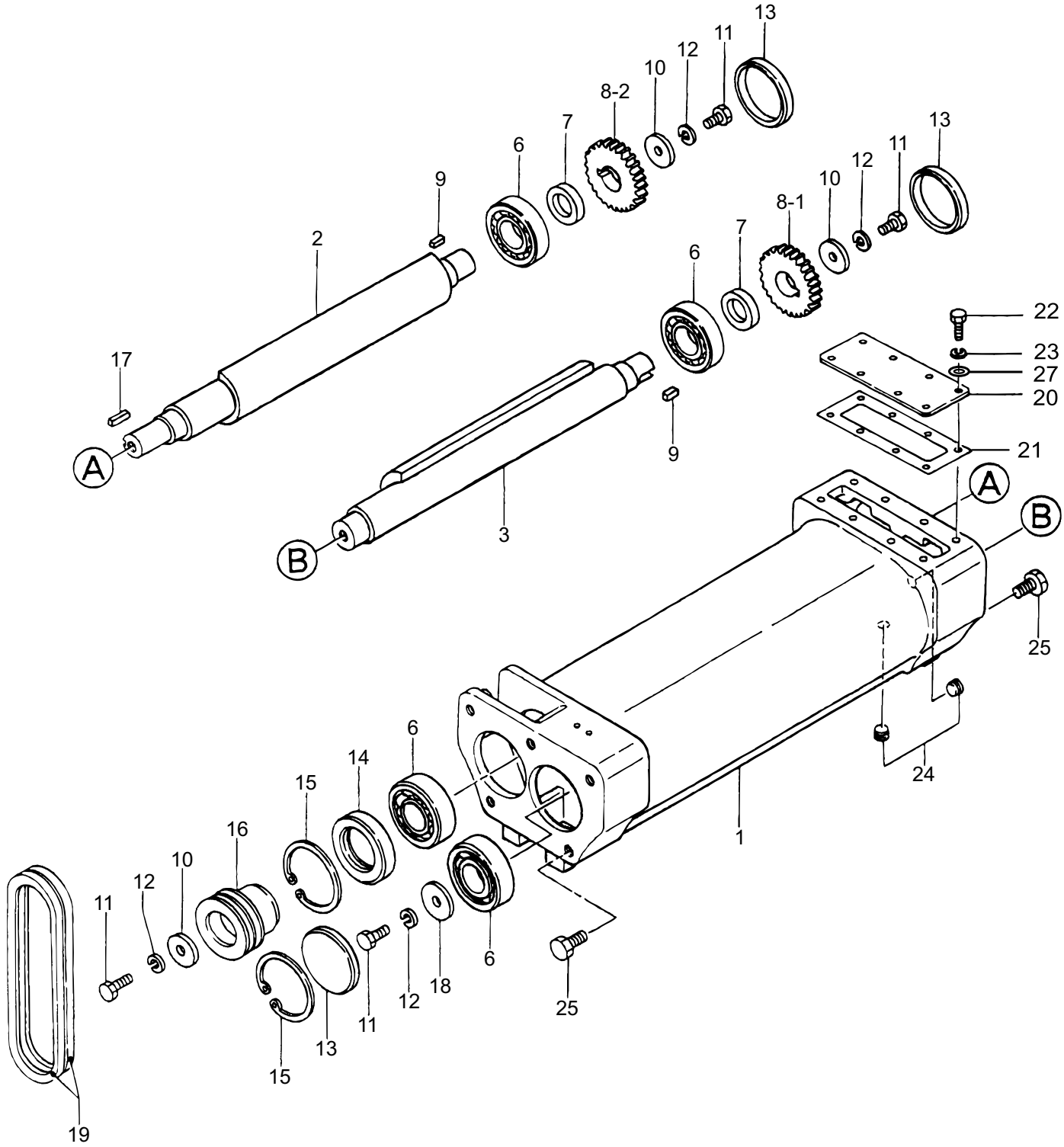
13
11
12
10
8-2
7
6
9
2
17
A
B
3
9
6
7
8-1
10
12
11
13
22
23
27
20
21
A
B
25
24
1
6
14
15
16
10
12
11
13
15
19
11
12
18
6
25

NO.	PART NO.	PART NAME	QTY.	REMARKS
1	515113090	VIBRATING CASE	1	
2	515334111	ROTARY SHAFT, DRIVE	1	
3	515334121	ROTARY SHAFT, DRIVEN	1	
6	040406308	BEARING 6308C4	4	
7	501011020	GEAR SPACER	2	
8-1	501011000	GEAR 38-1P	2	
8-2	501011001	GEAR 38-2P	2	
9	951400080	KEY 10X8X17	2	REPLACES P/N 951400081
10	952400900	WASHER 13446	3	
11	012212030	BOLT 12X30	4	REPLACES P/N 001221230
12	030212300	WASHER, LOCK M12	4	
13	953405570	SEAL CAP	3	
14	060206020	OIL SEAL	1	
15	080100900	STOP RING	2	
16	515447040	PULLEY	1	
17	951400090	KEY 10X8X33	1	
18	952401590	WASHER	1	
19	070100381	V-BELT A-38 RED	2	
20	515334140	COVER, GEAR	1	
21	515334150	PACKING, COVER	1	
22	014208020	BOLT 8X20	8	REPLACES P/N 001220820
23	030208200	WASHER, LOCK M8	8	
24	16185	PLUG PT1/4"	2	REPLACES P/N 894230
25	012214030	BOLT 14X25	10	REPLACES P/N 001221425
27	0401450080	WASHER, FLAT M8	8	REPLACES P/N 031108160

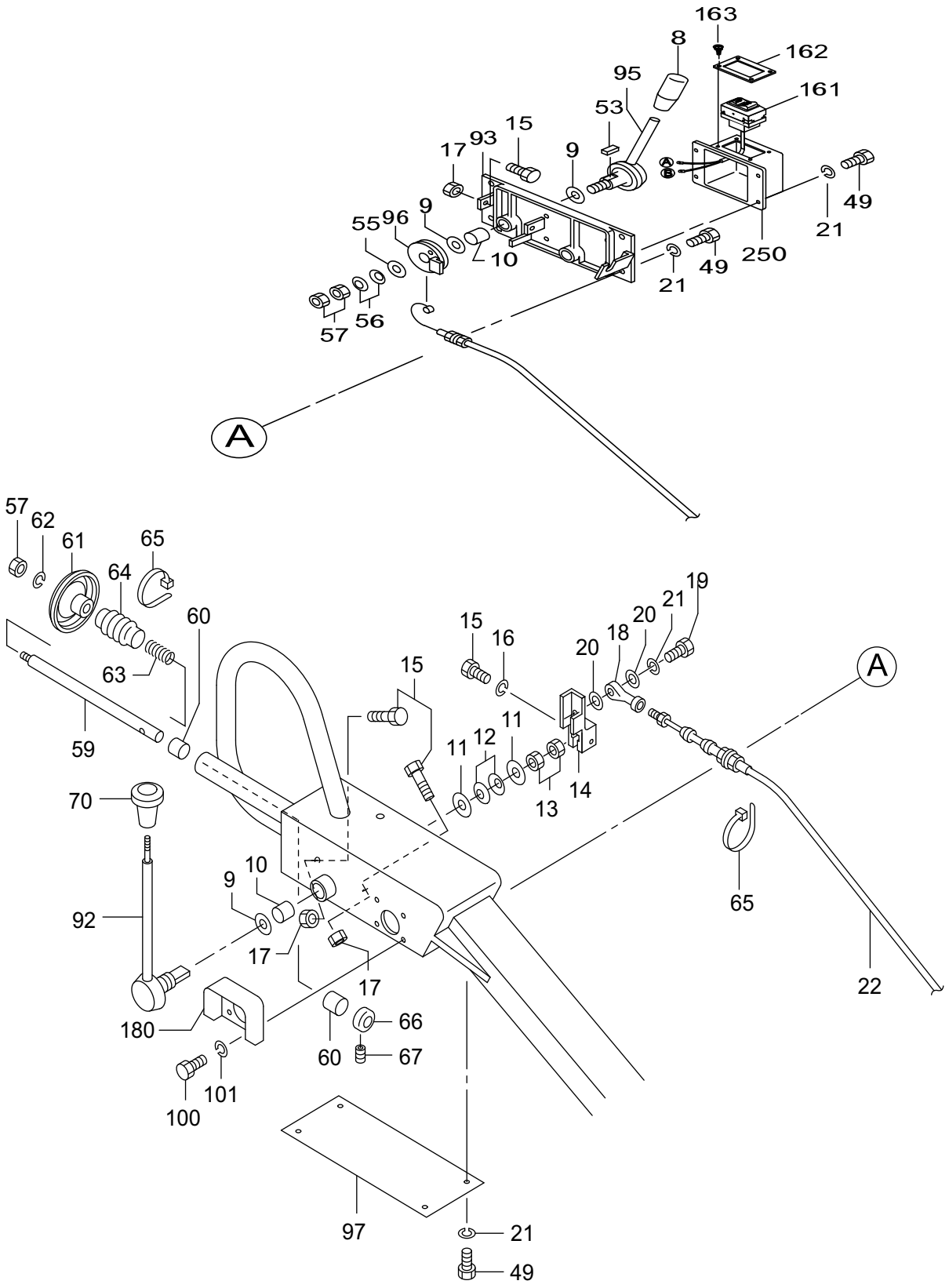
163
8
162
95
161
53
15
93
17
9
49
21
55
96
9
10
250
49
21
57
56
A
57
62
61
65
64
60
63
59
15
16
20
18
21
19
20
A
15
11
12
11
14
13
70
65
10
9
92
17
17
22
180
66
60
67
101
100
97
21
49

NO.	PART NO.	PART NAME	QTY.	REMARKS
8	959403840	BAR GRIP, I.D. 12MM	1	
9	953402930	COPPER PACKING	3	
10	509010130	BUSHING	2	
11	952405700	WASHER 19X40X0.6	2	
12	032118300	CONICAL SPRING WASHER M18	2	
13	020418110	NUT M18	2	
14	515349480	LEVER JOINT, TRAVELLING	1	
15	011208030	BOLT 8X30	4	REPLACES P/N 001220830
16	030208200	WASHER, LOCK M8	3	
17	020108060	NUT M8	3	REPLACES P/N 020308060
18	501011162	ROD END	2	
19	011206020	BOLT 6X20	1	REPLACES P/N 001220620
20	952404470	WASHER 6.5X15X1.6	4	
21	030206150	WASHER, LOCK M6	14	
22	515342360	CABLE ASSY.	1	
49	0105050616	BOLT 6X15	12	REPLACES P/N 001220615
53	951401431	KEY 5X5X8	1	
55	952404790	WASHER	1	
56	032212250	CONICAL SPRING WASHER M12	2	
57	0039312000	NUT M12	3	REPLACES P/N 020312100
59	515334820	ROD	1	
60	509010140	BUSHING	2	
61	515447720	DISC PLATE, DEAD-MAN	1	
62	030212300	WASHER, LOCK M12	1	
63	509436980	SPRING, DEAD-MAN	1	
64	509436990	PROTECTOR, DEAD-MAN	1	
65	507010110	CLAMP	2	
66	509436960	ROD STOPPER, DEAD-MAN	1	
67	01420601	SOCKET HEAD SCREW 6X6	2	REPLACES P/N 099206006
70	959300870	KNOB	1	
92	515336492	TRAVELLING LEVER	1	
93	515212950	LEVER SUPPORT, VIB. E/G	1	
95	515336500	LEVER, E/G	1	
96	515349490	GUIDE, WIRE (E/G)	1	
97	509436950	COVER, HANDLE BOX	1	
100	011006010	BOLT 6X10	4	REPLACES P/N 001220610
101	030206150	WASHER, LOCK M6	4	
161	516217920	SEESAW SWITCH	1	
162	516458960	SWITCH PLATE	1	
163	091505015	SCREW 5X15, WASHER, LOCK	4	
180	517452260	COVER	1	
250	516353210	SWITCH BOX	1	

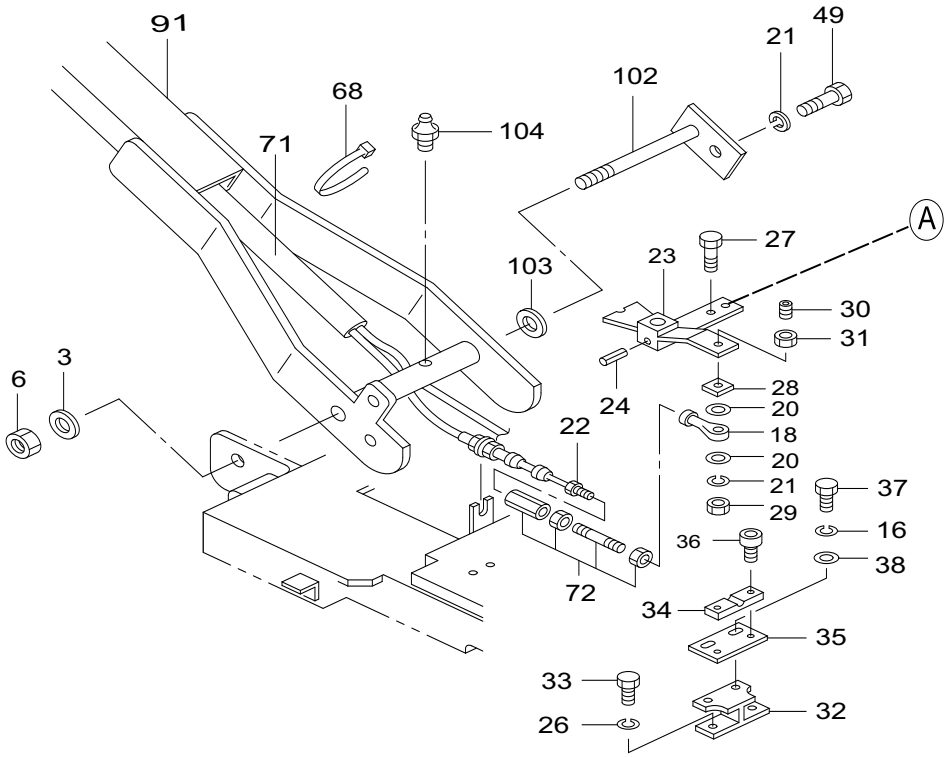

OPTION (DEAD MAN)

NEW TYPE

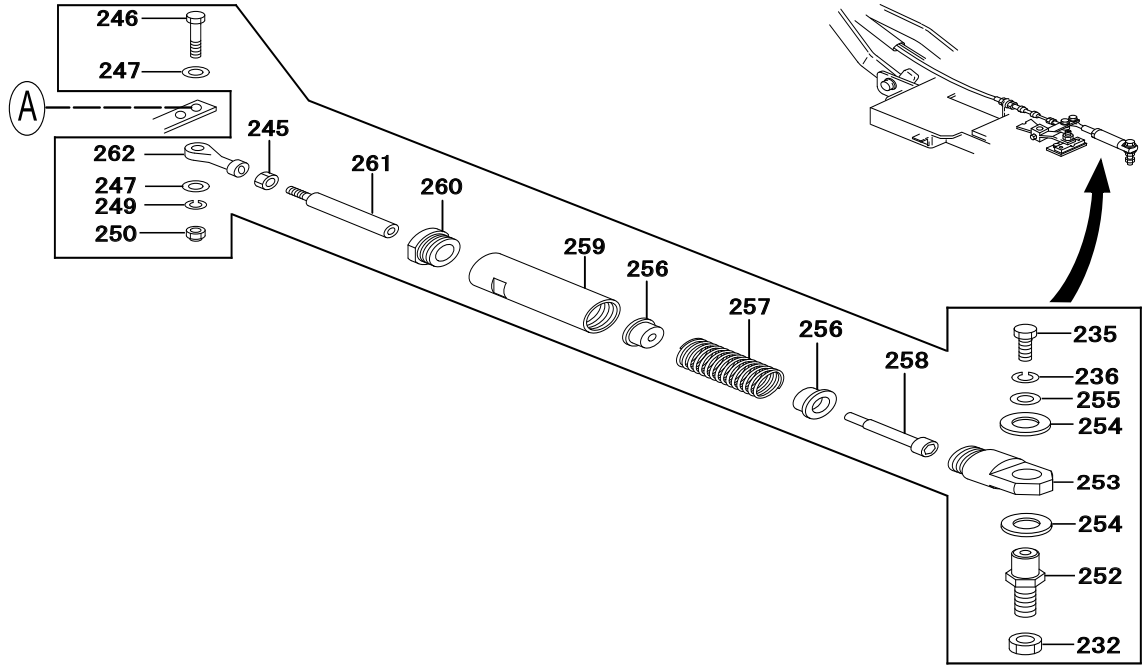

NO.	PART NO.	PART NAME	QTY.	REMARKS
3	0401450200	WASHER, FLAT M20	1	REPLACES P/N 031120320
6	022522017	LOCK NUT U-M20	1	
16	030208200	WASHER, LOCK M8	3	
18	501011162	ROD END	2	
20	952404470	WASHER	4	
21	030206150	WASHER, LOCK M6	14	
22	515342360	CABLE ASSY. 1700L	1	
23	515335780	LEVER, E-START	1	
24	025306032	SPRING PIN 6X32	1	REPLACES P/N 025406032
26	030210250	WASHER, LOCK M10	2	
27	001220635	BOLT 6X35	1	
28	515450560	SPACER	1	
29	022710607	NYLON NUT M6	1	
30	505015150	SPRING PLUNGER M16	1	
31	020416100	NUT M16	1	
32	509321160	GUIDE HOLDER	1	
33	012210020	BOLT 10X20	2	REPLACES P/N 001221020
34	515448170	GUIDE	1	
35	515448180	SLIDE PLATE	1	
36	014206015	SOCKET HEAD BOLT 6X15	2	REPLACES P/N 001520615
37	011008015	BOLT 8X15	2	REPLACES P/N 001220815
38	0401450080	WASHER, FLAT M8	3	REPLACES P/N 031108160
49	0105050616	BOLT 6X15	12	REPLACES P/N 001220615
68	506010070	CLAMP	8	
71	959021911	TUBE 25D-850L	1	
72	501910010	TURN BUCKLE ASSY.	1	
91	515120220	HANDLE (PIN-TYPE)	1	REPLACES P/N 515119120
102	515454971	HANDLE PIN	1	
103	515454980	COLLAR (HANDLE)	1	
104	351010050	GREASE FITTING A-MT 6X1	1	
232	0039312000	NUT M12	1	REPLACES P/N 020312100
235	011008015	BOLT 8X15	1	REPLACES P/N 001220815
236	030208200	WASHER, LOCK M8	1	
245	020106050	NUT M6	1	REPLACES P/N 020306050
246	001220630	BOLT 6X30	1	
247	952404470	WASHER	2	
249	030206150	WASHER, LOCK M6	1	
250	022710607	NYLON NUT M6	1	
252	515452200	HOLDER, SPRING CYLINDER	1	
253	515461580	LINK CAP	1	
254	506442940	COLLAR	2	
255	952401560	WASHER	1	
256	506442920	PISTON	1	
257	515461570	SPRING (DEAD MAN)	1	
258	515461600	INNER SHAFT	1	
259	515461590	CYLINDER	1	
260	506442930	CAP	1	
261	515461610	OUTER SHAFT	1	
262	501011162	ROD END	1	

HONDA GX390 SERIES ENGINE — CYLINDER HEAD ASSY.

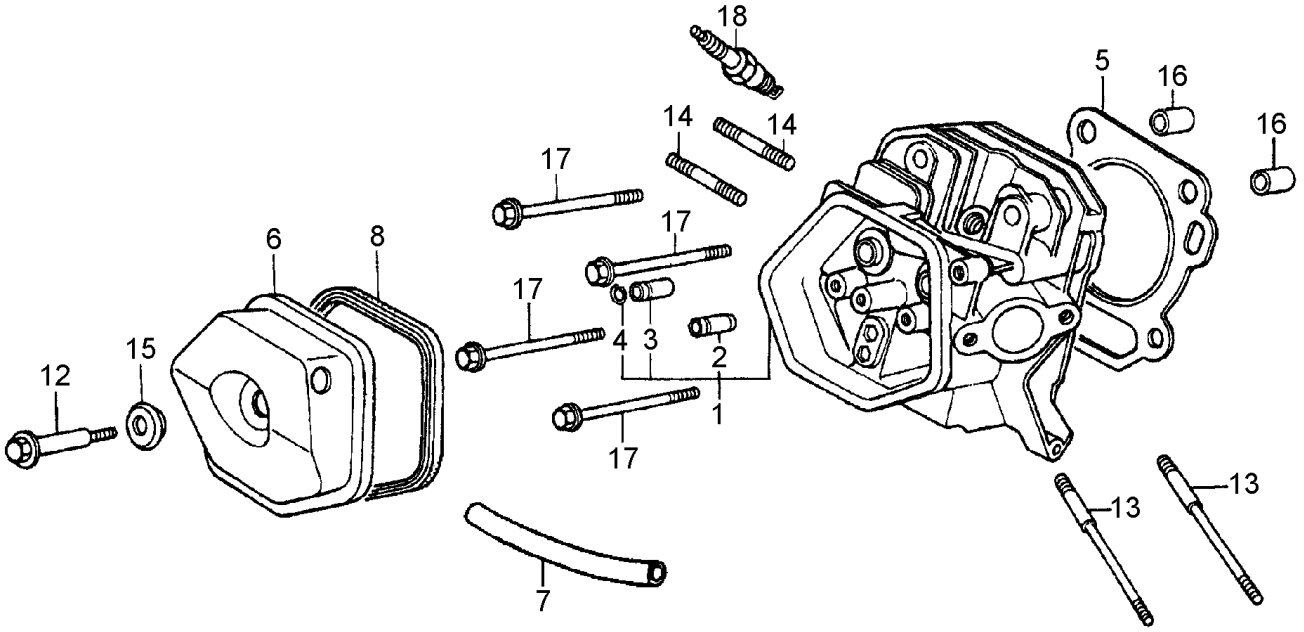

HONDA GX390 SERIES ENGINE — CYLINDER HEAD ASSY.

NO.	PART NO.	PART NAME	QTY.	REMARKS
1◊♣	12200ZF6406	HEAD COMP., CYLINDER	1	INCLUDES ITEMS W/#
1❖	12210Z5T406	HEAD COMP., CYLINDER	1	INCLUDES ITEMS W/%
1♦	12210-Z5T-416	HEAD COMP., CYLINDER	1	INCLUDES ITEMS W/$
2#%$	12204ZE2306	GUIDE, IN. VALVE (OVERSIZE)	1	
3#%$	12205ZE2305	GUIDE, EX. VALVE (OVERSIZE)	1	
4#%$	12216ZE2300	CLIP, VALVE GUIDE	1	
5◊♣	12251ZF6W00	GASKET, CYLINDER HEAD	1	
5❖♦	12251Z5T003	GASKET, CYLINDER HEAD	1	
6	12310ZE2020	COVER COMP., HEAD	1	
6♦	12310-ZE3-791	COVER COMP., HEAD	1	
7◊	950051110530	TUBE, BREATHER	1	
7♣	950051100130M	TUBE, BREATHER	1	
7❖	12357Z5T020	TUBE, BREATHER	1	
7♦	12315-ZE3-840	TUBE, BREATHER	1	
8	12391ZE2020	PACKING, HEAD COVER	1	
12◊♣	90014ZE2000	BOLT, HEAD COVER	1	
12❖♦	90014Z5T000	BOLT, HEAD COVER	1	
13	90042ZE8000	BOLT, STUD 8X31.5	2	
14	92900080320E	BOLT, STUD 8X32	2	
15	90441ZE2010	WASHER COMP., HEAD COVER	1	
16	9430112200	PIN, DOWEL 12X20	2	
17	957011008000	BOLT, FLANGE 10X80	4	
18	9807956846	SPARK PLUG, NKG, BPR6ES	1	
18♦	065-01404-80	SPARK PLUG, NKG, BPR6ES	1	

NOTICE

◊ Honda GX390K1SM32

♣ Honda GX390U1SM32

❖ Honda GX390UT2SM32

♦ Honda GX390UT2SCM1

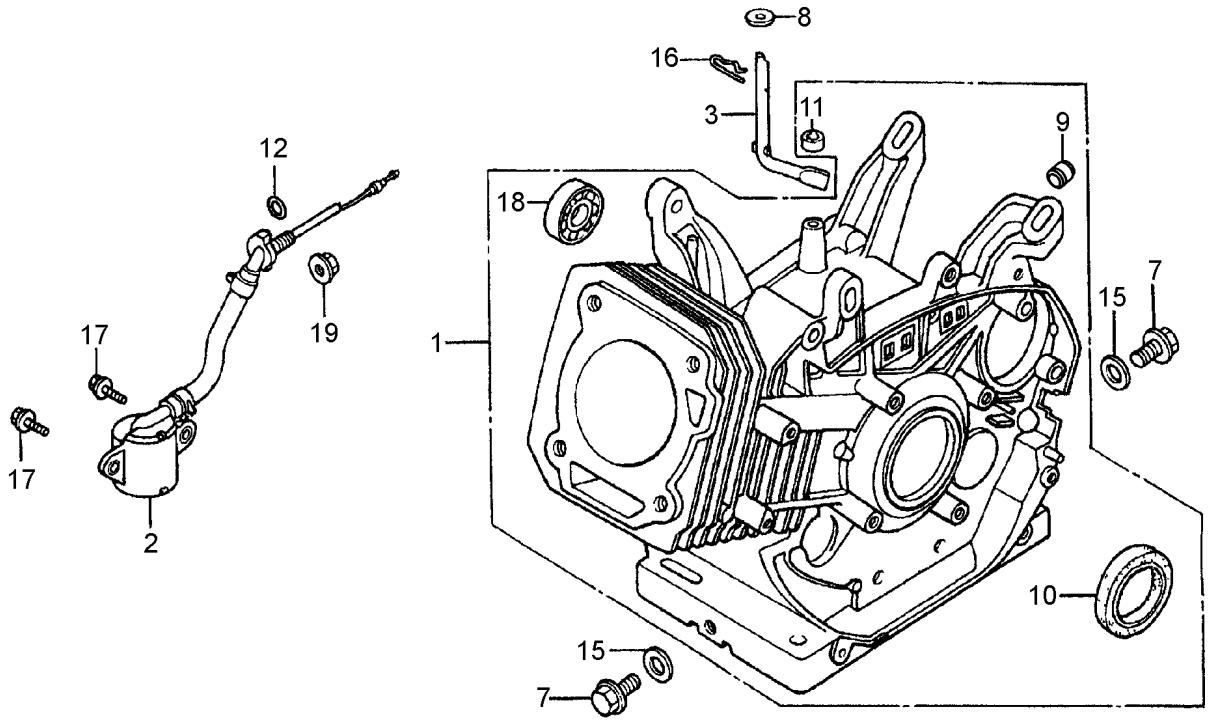
8
16
3
11
9
12
18
7
15
17
19
1
17
2
10
15
7

HONDA GX390 SERIES ENGINE — CYL. BARREL ASSY.

NO.	PART NO.	PART NAME	QTY.	REMARKS
1◊	12000ZF6L04	BARREL ASSY., CYLINDER	1	INCLUDES ITEMS W/#
1♣	12000ZF6435	BARREL ASSY., CYLINDER	1	INCLUDES ITEMS W/%
1❖	12000Z5T405	BARREL ASSY., CYLINDER	1	INCLUDES ITEMS W/$
1♦	12000Z5T405	BARREL ASSY., CYLINDER	1	INCLUDES ITEMS W/&
2◊♣	15510ZE2053	SWITCH ASSY, OIL LEVEL	1	
2❖♦	35480ZF6003	SWITCH ASSY, OIL LEVEL	1	
3	16541ZE3010	SHAFT, GOVERNOR ARM	1	
7	90131896650	BOLT, DRAIN PLUG	2	REPLACES P/N 90131883000
8	90446KE1000	WASHER, 8.2X17X0.8	1	
9◊#	90801ZE2003	PLUG, SEALING	1	NOT USED ON ❖, ♣ ,♦ ENGINES
10#%	91201ZE3004	OIL SEAL 35X52X8	1	
10$&	91201Z1C003	OIL SEAL 35X52X8	1	
11#%$&	91201ZE9003	OIL SEAL 8X14X5	1	REPLACES P/N 91203952771
12	91353671003	O-RING 14MM	1	REPLACES P/N 91353671004
15	031112230	WASHER, DRAIN PLUG 12MM	2	REPLACES P/N 9410912000
16	9425110000	PIN, LOCK 10MM	1	
17	957010601200	FLANGE BOLT 6X12	2	
18#%$&	961006202000	BEARING, RADIAL BALL 6202	1	
19	9405010000	NUT, FLANGE, 10MM	1	

NOTICE

◊ Honda GX390K1SM32

♣ Honda GX390U1SM32

❖ Honda GX390UT2SM32

♦ Honda GX390UT2SCM1

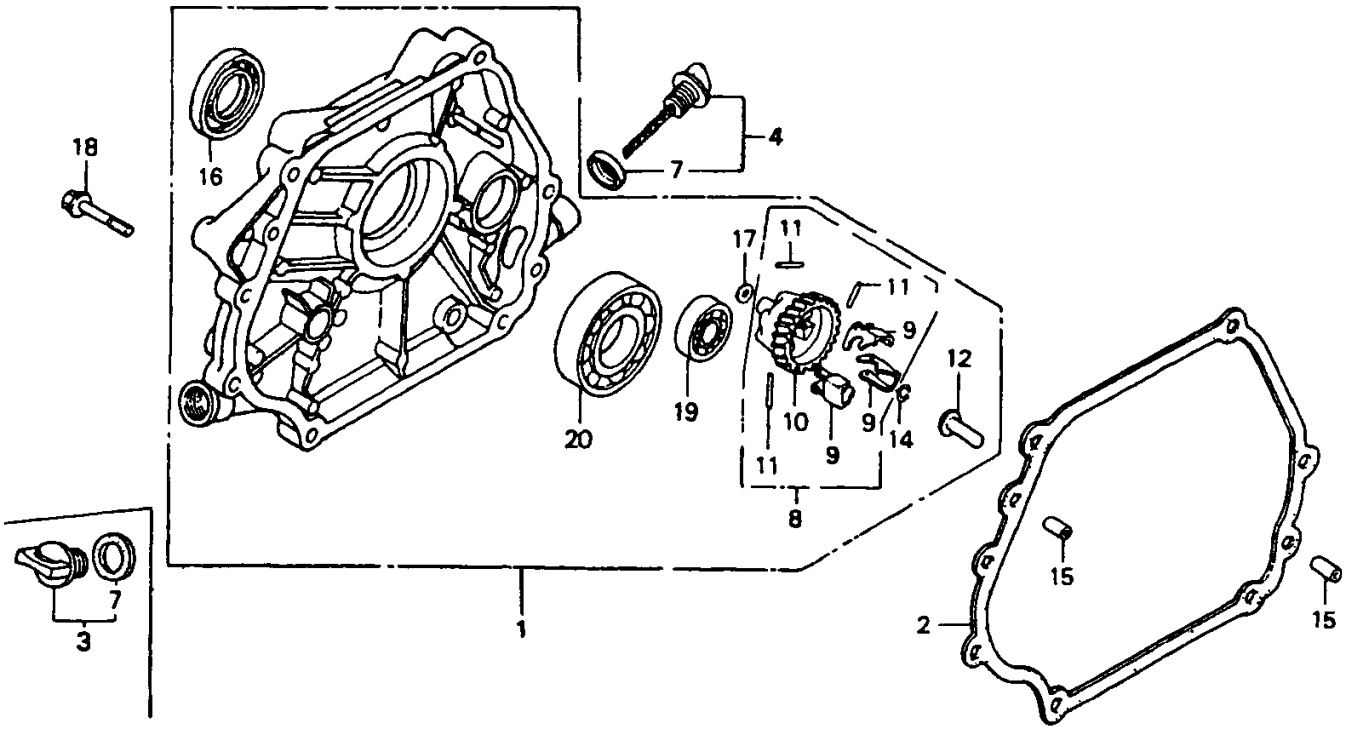
18
16
4
7
17
11
11
9
12
20
19
10
9
14
11
9
8
15
7
3
1
2
15

HONDA GX390 SERIES ENGINE — CRANKCASE CVR. ASSY.

NO.	PART NO.	PART NAME	QTY.	REMARKS
1◊♣	11300ZE3040	COVER ASSY., CRANKCASE	1	INCLUDES ITEMS W/#
1❖♦	11300Z1C000	COVER ASSY., CRANKCASE	1	INCLUDES ITEMS W/$
2◊♣	11381ZE3801	PACKING, CRANKCASE COVER	1	
2❖♦	11381Z5T000	PACKING, CRANKCASE COVER	1	
3◊♣	15600ZG4003	OIL PLUG ASSY.	1	INCLUDES ITEM W/@
3❖♦	15600Z0T820	OIL PLUG ASSY.	1	INCLUDES ITEM W/&
4◊♣	15600735003	CAP ASSY., OIL FILLER	1	INCLUDES ITEMS W/♥
4❖♦	15600Z1C000	CAP ASSY., OIL FILLER	1	INCLUDES ITEMS W/♠
7@♥	15625ZE1003	PACKING, OIL FILLER CAP	2	USED ON ◊, ♣ ENGINES
7&♠	15625Z0T800	PACKING, OIL FILLER CAP	2	USED ON ❖, ♦ ENGINES
8#$	16510ZE3000	GOVERNOR ASSY.	1	INCLUDES ITEMS W/%
9#$%	16511ZE8000	WEIGHT, GOVERNOR	3	
10#$%	16512ZE3000	HOLDER, GOVERNOR WEIGHT	1	
11#$%	16513ZE2000	PIN, GOVERNOR WEIGHT	3	
12#$	16531Z0A000	SLIDER, GOVERNOR	1	
14#$	90602ZE1000	CLIP, GOVERNOR HOLDER	1	
15	90701HC4000	PIN, DOWEL 8X12	2	
16#	91201ZE3004	OIL SEAL 35X52X8	1	USED ON ◊, ♣ ENGINES
16$	91201Z1C003	OIL SEAL 35X52X8	1	USED ON ❖, ♦ ENGINES
17#$	58176	WASHER, FLAT 6MM	1	REPLACES P/N 9410106800
18	957010804000	BOLT, FLANGE 8X40	7	
19#$	961006202000	BEARING, RADIAL BALL 6202	1	
20#$	961006207000	BEARING, RADIAL BALL 6207	1	

NOTICE

◊ Honda GX390K1SM32

♣ Honda GX390U1SM32

❖ Honda GX390UT2SM32

♦ Honda GX390UT2SCM1

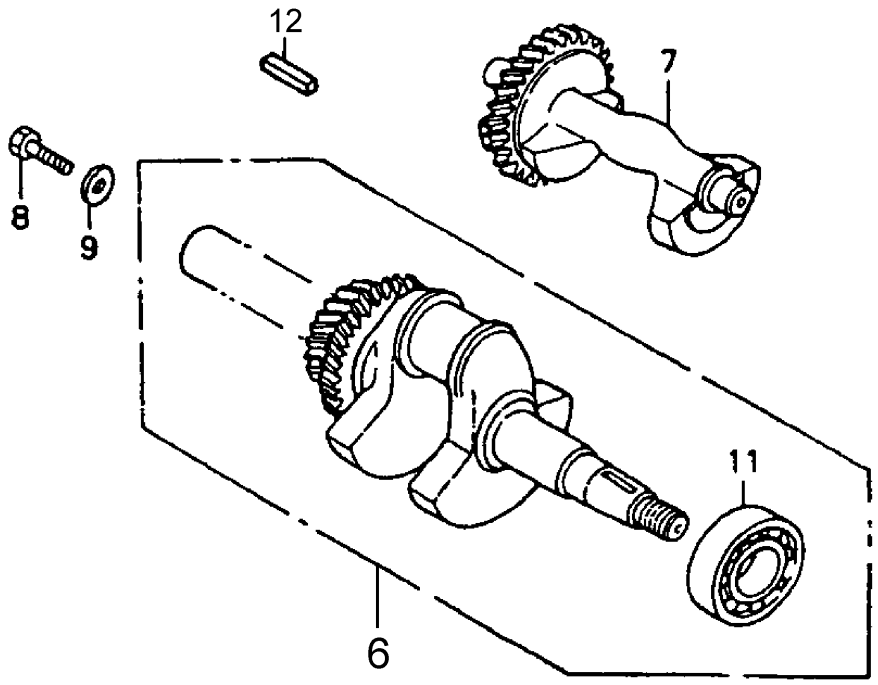
12
7
8
9
11
6

HONDA GX390 SERIES ENGINE — CRANKSHAFT ASSY.

NO.	PART NO.	PART NAME	QTY.	REMARKS
6◊	13310ZF6W70	CRANKSHAFT COMP.	1	INCLUDES ITEM W/#
6♣❖♦	13310ZF6W72	CRANKSHAFT COMP.	1	INCLUDES ITEM W/%
7◊	13351ZE3010	WEIGHT, BALANCER	1	
7♣❖♦	13351-Z1C-900	WEIGHT, BALANCER	1	
8◊♣❖	92101080250A	BOLT, HEX. 8X25	1	
9◊♣❖	90534706010	WASHER, LOCK 8MM	1	
11#	91001ZF6003	BEARING, RADIAL BALL 6207SH	1	USED ON ◊ENGINE
11%	91001ZF6013	BEARING, RADIAL BALL, 6207SH	1	USED ON ♣,❖AND♦ ENGINES
12	90741889810	KEY, 7X7X33	1	REPLACES P/N 90741805000

NOTICE

◊ Honda GX390K1SM32

♣ Honda GX390U1SM32

❖ Honda GX390UT2SM32

♦ Honda GX390UT2SCM1

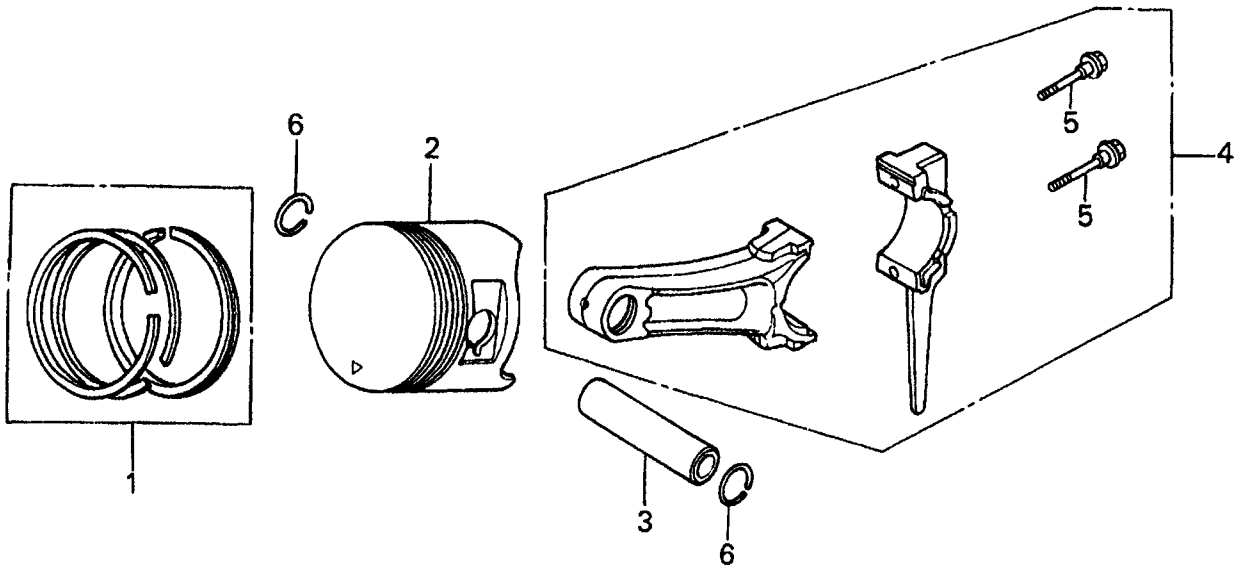
6
2
5
4
5
1
3
6

NO.	PART NO.	PART NAME	QTY.	REMARKS
1◊♣	13010ZF6003	RING SET, PISTON (STD.)	1	
1❖♦	13010Z5R004	RING SET, PISTON (STD.)	1	
1◊♣	13011ZF6003	RING SET, PISTON (0.25)	1	
1❖♦	13011Z5R004	RING SET, PISTON (0.25)	1	
1◊♣	13012ZF6005	RING SET, PISTON (0.50)	1	REPLACES P/N 13012ZF6003
1❖♦	13012Z5R004	RING SET, PISTON (0.50)	1	
1◊	13013ZF6003	RING SET, PISTON (0.75)	1	
1♣	13104ZF6W00	RING SET, PISTON (0.75)	1	
1❖♦	13013Z5R004	RING SET, PISTON (0.75)	1	
2◊♣	13101ZF6W00	PISTON (STD.)	1	
2❖	13101Z5T800	PISTON (STD.)	1	
2♦	13101Z1C900	PISTON (STD.)	1	
2◊♣	13102ZF6W00	PISTON (0.25)	1	
2❖♦	13102Z5T800	PISTON (0.25)	1	
2◊♣	13103ZF6W00	PISTON (0.50)	1	
2❖♦	13103Z5T800	PISTON (0.50)	1	
2◊♣	13104ZF6W00	PISTON (0.75)	1	
2❖♦	13104Z5T800	PISTON (0.75)	1	
3◊♣	13111ZF6W00	PIN PISTON	1	
3❖♦	13111Z5T000	PIN PISTON	1	
4◊	13200ZE3010	ROD ASSY., CONNECTING (STD).	1	INCLUDES ITEM W/%
4♣	13200ZE3020	ROD ASSY., CONNECTING (STD).	1	INCLUDES ITEM W/%
4❖	13200Z1C000	ROD ASSY., CONNECTING (STD)	1	INCLUDES ITEM W/%
4♦	13200-Z1C-900	ROD ASSY., CONNECTING (STD)	1	INCLUDES ITEM W/%
4◊♣	13200ZE3315	ROD ASSY., CONNECTING (0.25)	1	INCLUDES ITEM W/%
4❖	13200Z1C305	ROD ASSY., CONNECTING (0.25)	1	INCLUDES ITEM W/%
5%	90001ZE8000	BOLT, CONNECTING ROD	2	
6	90601ZE3000	CLIP, PISTON PIN, 20MM	2	

NOTICE

◊ Honda GX390K1SM32

♣ Honda GX390U1SM32

❖ Honda GX390UT2SM32

♦ Honda GX390UT2SCM1

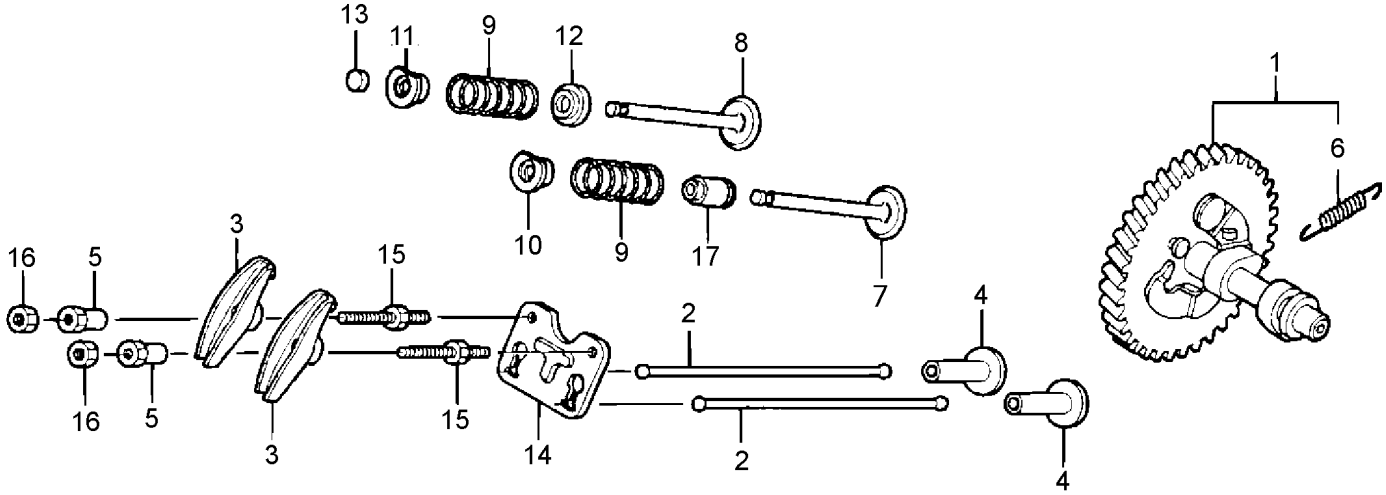
13
11
9
12
8
1
6
10
9
17
7
3
16
5
15
2
4
16
5
3
15
14
2
4

NO.	PART NO.	PART NAME	QTY.	REMARKS
1◊♣	14100ZF6W01	CAMSHAFT ASSY.	1	INCLUDES ITEM W/$
1❖	14100Z5T810	CAMSHAFT ASSY.	1	INCLUDES ITEM W/$
				S/N 1097146 AND BELOW
1❖	14100Z5T910	CAMSHAFT ASSY.	1	S/N 1097147 AND ABOVE
1♦	14100Z5T910	CAMSHAFT ASSY.	1	INCLUDES ITEM W/$
2◊♣	14410ZE3013	ROD, PUSH	2	
2❖	14410Z1C000	ROD, PUSH	2	
3	14431ZE2010	ARM, VALVE ROCKER	2	
4	14441ZE2000	LIFTER, VALVE	2	
5	14451ZE1013	PIVOT, ROCKER ARM	2	
5	14451-Z4M-000	PIVOT, ROCKER ARM	2	
6$	14568ZE1000	SPRING, WEIGHT RETURN	1	
7◊♣	14711ZE3000	VALVE, IN.	1	
7❖	14711Z5T000	VALVE, IN.	1	
7♦	14711-Z5T-900	VALVE, IN.	1	
8◊♣	14721ZE3000	VALVE, EX.	1	
8❖	14721Z5T000	VALVE, EX.	1	
8♦	14721-Z5T-900	VALVE, EX.	1	
9◊♣	14751ZE2003	SPRING, VALVE	2	
9❖♦	14751Z1C000	SPRING, VALVE	2	
10◊♣	14771ZE2000	RETAINER, IN. VALVE SPRING	1	
10❖♦	14771Z8S000	RETAINER, IN. VALVE SPRING	1	
11	14773ZE2000	RETAINER, EX. VALVE SPRING	1	
11♦	14771Z8S000	RETAINER, IN. VALVE SPRING	1	
12	14775ZE2010	SEAT, VALVE SPRING	1	
13	14781ZE2000	ROTATOR, VALVE	1	
14◊♣	14791ZE2010	PLATE, PUSH ROD	1	
14❖♦	14791Z1D000	PLATE, PUSH ROD	1	
15	90012ZE0010	BOLT, PIVOT 8MM	2	
16	90206ZE1000	NUT, PIVOT ADJUSTING	2	
17	12209ZE8003	SEAL, VALVE STEM	1	

NOTICE

◊ Honda GX390K1SM32

♣ Honda GX390U1SM32

❖ Honda GX390UT2SM32

♦ Honda GX390UT2SCM1

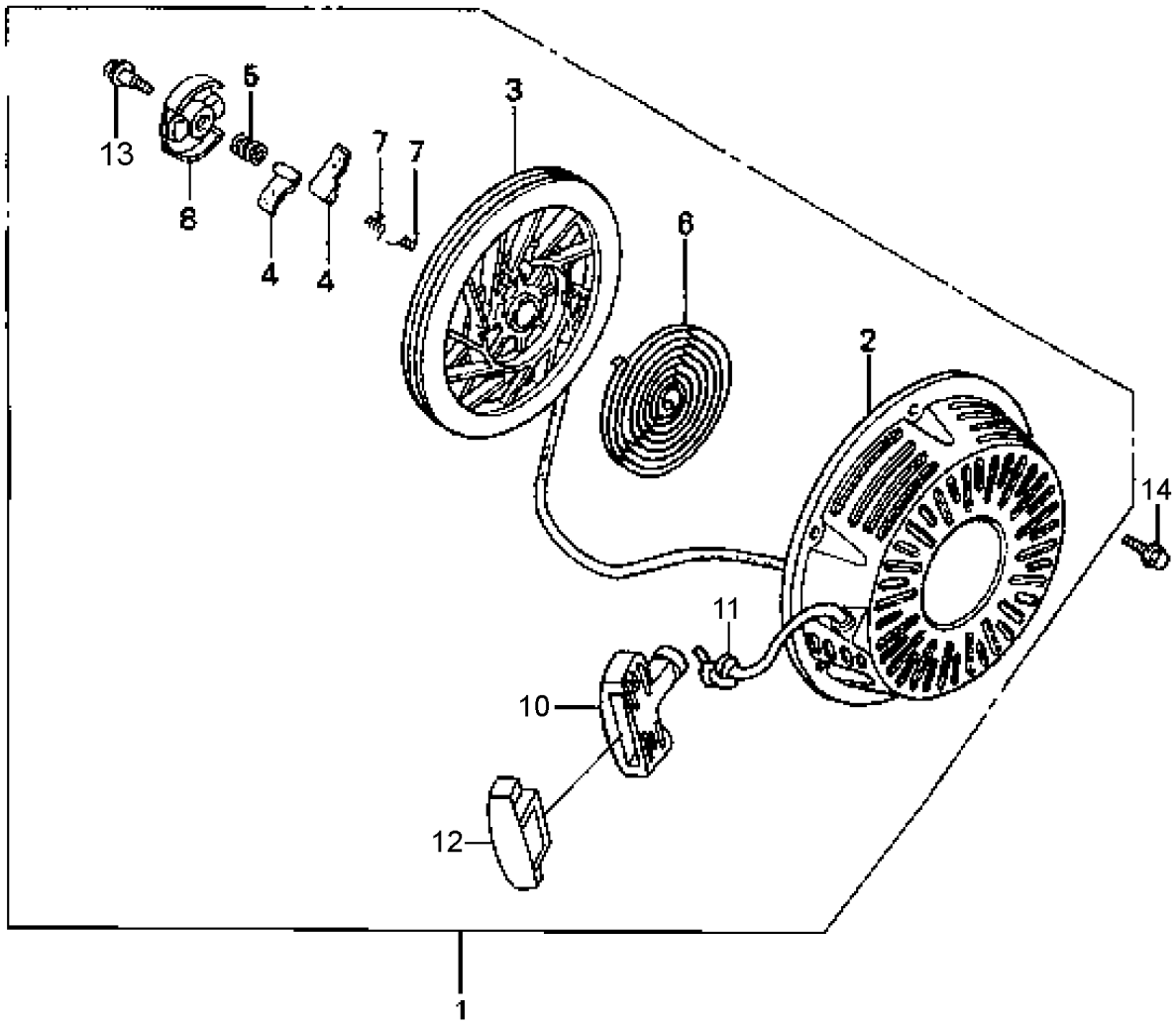
13
5
8
4
4
7
7
3
6
2
14
11
10
12
1

HONDA GX390 SERIES ENGINE — RECOIL STARTER ASSY.

NO.	PART NO.	PART NAME	QTY.	REMARKS
1◊♣	28400ZE3W01ZB	STARTER ASSY., RECOIL, NH1 (BLACK)	1	INCLUDES ITEMS W/#
1❖	28400Z5T305ZB	STARTER ASSY., RECOIL, NH1 (BLACK)	1	INCLUDES ITEMS W/%
1♦	28400Z5T305ZB	STARTER ASSY., RECOIL, NH1 (BLACK)	1	INCLUDES ITEMS W/$
2#%$	28410ZE3W01ZB	CASE COMP., RECOIL STARTER, BLACK	1	
3#%$	28421ZE3W01	PULLEY, RECOIL STARTER	1	
4#%$	28422ZE2W01	RACHET, STARTER,	2	
5#%$	28441ZE2W01	SPRING, FRICTION	1	
6#%$	28442ZE2W01	SPRING, STARTER RETURN	1	
7#%$	28443ZE2W01	SPRING, RATCHET	2	
8#%$	28444ZE2W01	RETAINER, SPRING	1	
10#	28461ZE2W02	GRIP, STARTER	1	USED ON ◊ AND ♣ ENGINES
10%$	28461Z5T305	GRIP, STARTER	1	USED ON ❖ AND ♦ ENGINES
11#%$	28462ZV7003	ROPE, RECOIL STARTER	1	REPLACES P/N 28462ZE3W01
12%	28463Z5T003	GRIP, REINFORCEMENT	1	USED ON AND ❖ ENGINE
12$	28463-Z5T-013	GRIP, REINFORCEMENT	1	USED ON AND ♦ ENGINE
13#%$	90004ZE2W01	SCREW, CENTER	1	
14◊	957010600800	BOLT, FLANGE 6X8	3	
14♣❖	90008ZE2003	BOLT, FLANGE 6X10	3	
14♦	95701-0601000	BOLT, FLANGE 6X10	3	

NOTICE

◊ Honda GX390K1SM32

♣ Honda GX390U1SM32

❖ Honda GX390UT2SM32

♦ Honda GX390UT2SCM1

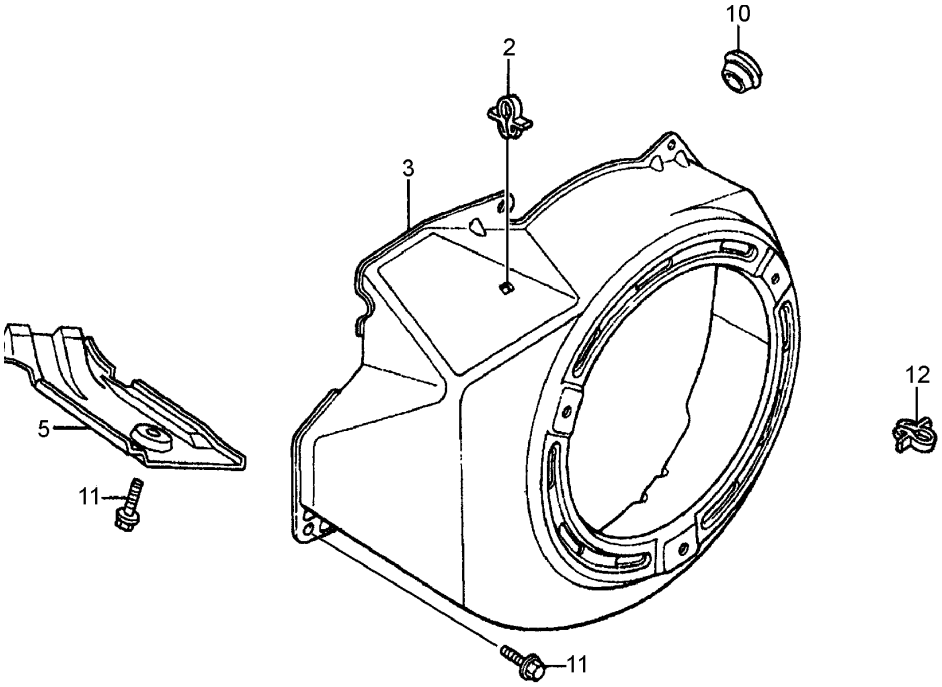
10
2
3
12
5
11
11

HONDA GX390 SERIES ENGINE — FAN COVER ASSY.

NO.	PART NO.	PART NAME	QTY.	REMARKS
2	16731ZE2003	CLIP, TUBE	1	
3◊♣	19610ZE3010ZB	COVER COMP., FAN, NH1 (BLACK)	1	
3❖♦	19610Z5T000ZB	COVER COMP., FAN, NH1 (BLACK)	1	
5◊♣	19631ZE3W00	SHROUD	1	
5❖♦	19631Z5T000	SHROUD	1	
10	81329567020	GROMMET, DRAIN HOLE	1	
11	90013883000	BOLT, FLANGE 6X12	6	
12❖♦	36103ZE1000	HOLDER, STOP SWITCH CORD	1	

NOTICE

◊ Honda GX390K1SM32

♣ Honda GX390U1SM32

❖ Honda GX390UT2SM32

♦ Honda GX390UT2SCM1

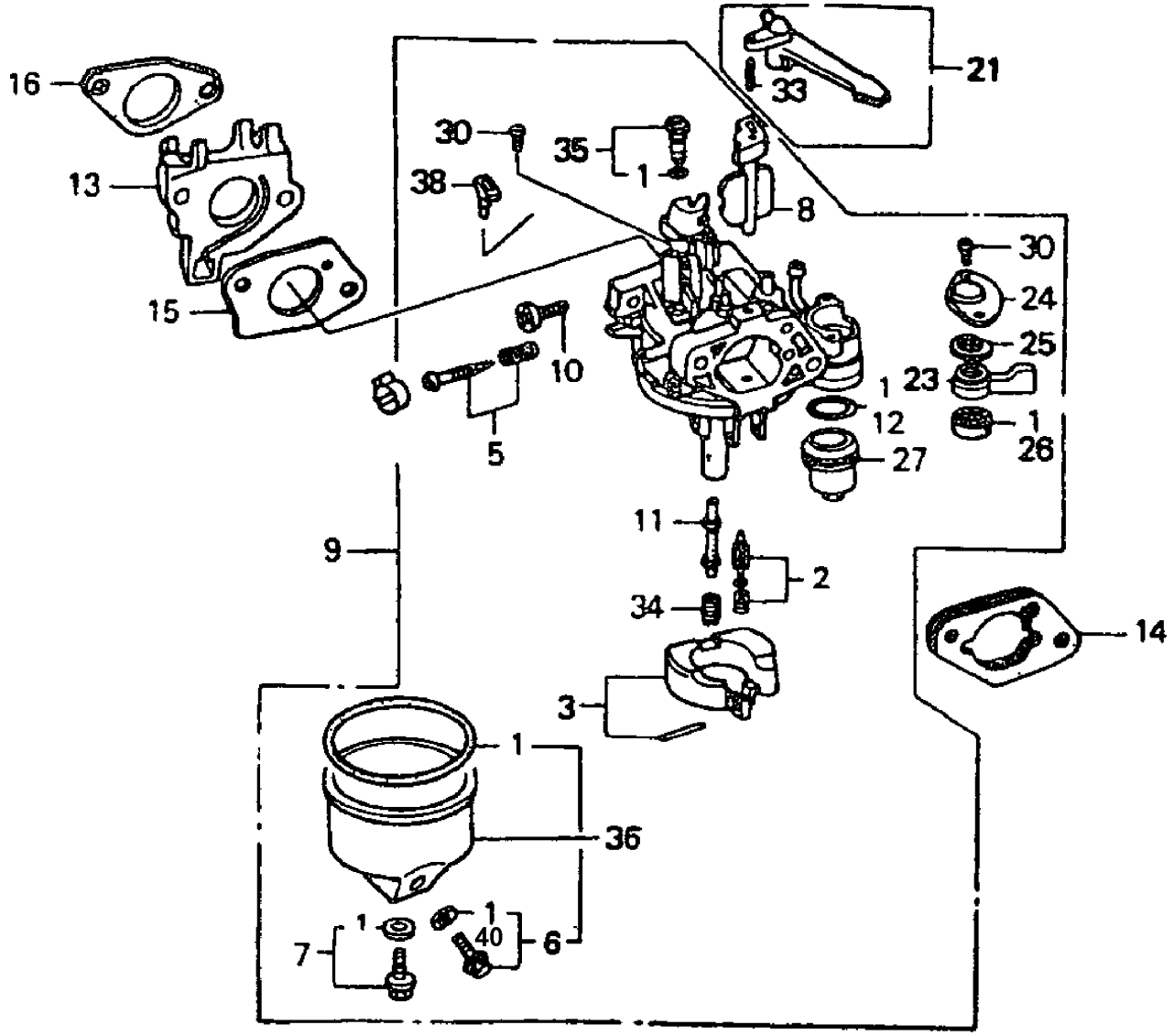

NOTICE

Gasket Set, item 1 included with items 6, 7, 12, 26, 35, 36 and 40.

HONDA GX390 SERIES ENGINE — CARBURETOR ASSY.

NO.	PART NO.	PART NAME	QTY.	REMARKS
1#✻%$◗	16010ZE2812	GASKET SET	1	
2	16011ZA0931	VALVE SET, FLOAT	1	
3#✻	16013ZA0931	FLOAT SET	1	
3%$	16013Z1C003	FLOAT SET	1	
5✻	16016ZE0005	PILOT SET SCREW	1	
5%$	16016ZH7W01	PILOT SET SCREW	1	
6#✻	16024ZE1811	DRAIN SCREW SET	1	INCLUDES ITEM W/◗
6%$	16024Z5T901	DRAIN SCREW SET	1	INCLUDES ITEM W/◗
7#✻	16028ZE0005	SCREW SET	1	INCLUDES ITEM W/◗
7%$	16028Z5T901	SCREW SET	1	INCLUDES ITEM W/◗
8#✻	16044ZE3W20	CHOKE SET	1	
8%$	16044Z5T901	CHOKE SET	1	
9	16100ZF6V01	CARB. ASSY., BE85B B (◊ ENGINE)	1	INCLUDES ITEMS W/#
9	16100ZF6V01	CARB. ASSY., BE85B B (♣ ENGINE)	1	INCLUDES ITEMS W/✻
9	16100Z5T901	CARB. ASSY., BE88A A (❖ ENGINE)	1	INCLUDES ITEMS W/%
9	16100-Z5T-781	CARB. ASSY., BE94J A (♦ ENGINE)	1	INCLUDES ITEMS W/$
10#✻%$	16124ZE0005	SCREW, THROTTLE STOP	1	
11#✻	16166ZF6V00	NOZZLE, MAIN	1	
11%	16166Z5T901	NOZZLE, MAIN	1	
11$	16166-Z5T-781	NOZZLE, MAIN	1	
12#✻%$	16955283000	PACKING, FUEL STRAINER CUP	1	REPLACES P/N 16173001004 INCLUDES ITEM W/◗
13	16211ZF6000	INSULATOR, CARBURETOR	1	
13	16211Z5T000	INSULATOR, CARBURETOR	1	
14	16220ZA0702	SPACER COMP., CARBURETOR	1	
15	16221ZF6800	PACKING, CARBURETOR	1	
15	16220ZA0702	PACKING, CARBURETOR	1	
16	16223ZE3W00	PACKING, INSULATOR	1	
16	16212Z5T000	PACKING, INSULATOR	1	

NOTICE

◊ Honda GX390K1SM32

♣ Honda GX390U1SM32

❖ Honda GX390UT2SM32

♦ Honda GX390UT2SCM1

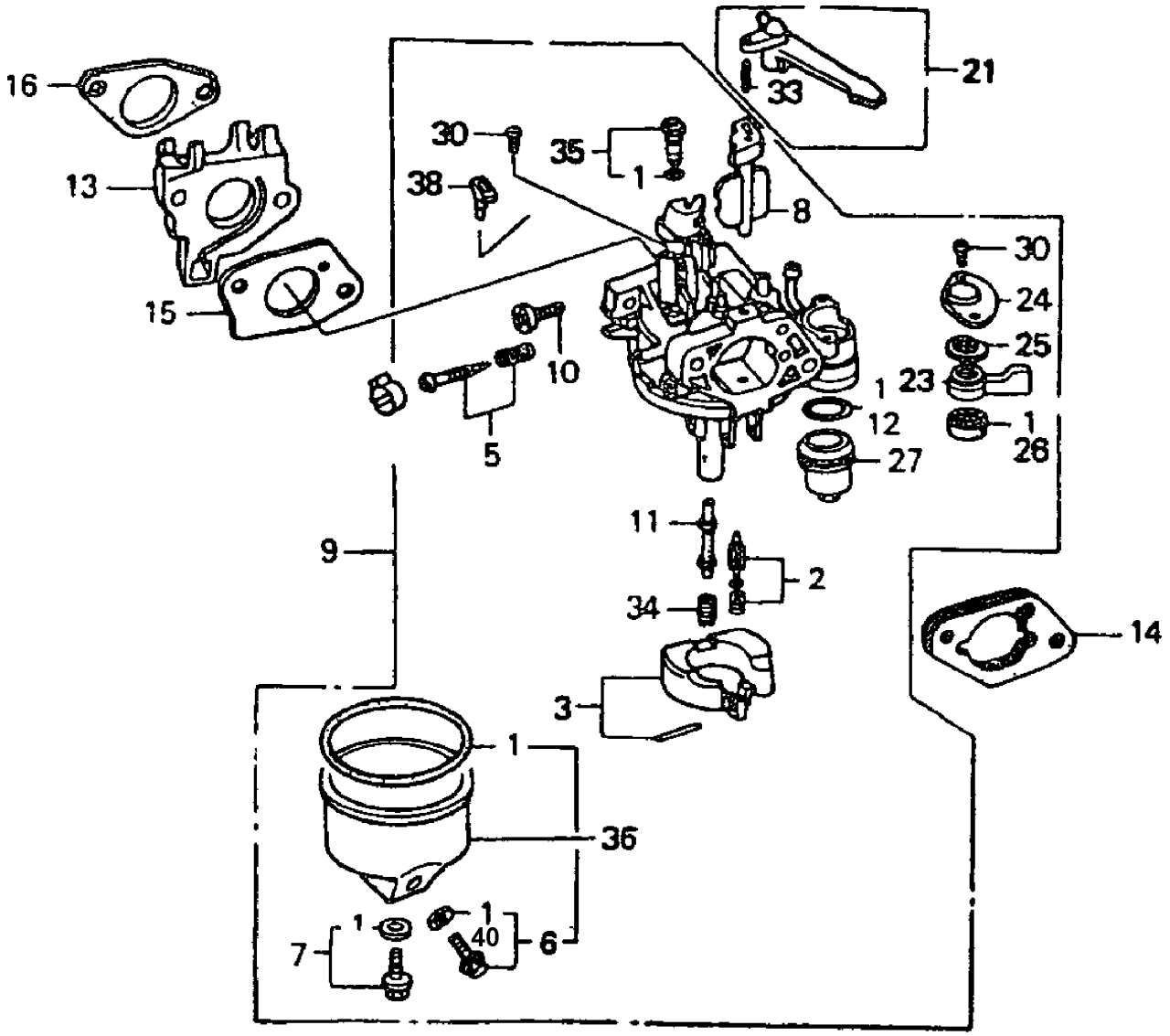
16
13
15
30
38
35
1
33
21
8
30
24
25
23
1
26
10
5
1
12
27
11
2
34
14
9
3
1
36
1
1
40
6
7

NO.	PART NO.	PART NAME	QTY.	REMARKS
21	16610ZE1000	CHOKE LEVER COMPLETE	1	INCLUDES ITEM W/
23#✻%$	16953ZE1812	LEVER, COCK	1	
24#✻%$	16954ZE1812	PLATE, LEVER SETTING	1	
25#✻%$	16956ZE1811	SPRING, COCK LEVER	1	
26#✻%$	16957ZE1812	PACKING, FUEL COCK	1	INCLUDES ITEM W/◗
27#✻%$	16967ZE0811	CUP, FUEL STRAINER	1	
30#✻%$	93500030060H	SCREW 3X6	3	REPLACES P/N 93500030061H
33	9430520122	SPRING PIN 2X12	1	
34#✻	99101ZH80920	JET, MAIN #92	1	
34%	99101ZH80980	JET, MAIN #98	1	
34$	99101-ZH81180	JET, MAIN #118	1	
35#✻$	99204ZA00450	PILOT JET SET, PILOT #45	1	INCLUDES ITEM W/◗
35%	99204ZE00380	PILOT JET SET, PILOT #38	1	INCLUDES ITEM W/◗
36#✻	16015ZE8005	CHAMBER SET, FLOAT (◊/♣)	1	INCLUDES ITEM W/◗
36%$	16015Z5T901	CHAMBER SET, FLOAT (❖/♦)	1	INCLUDES ITEM W/◗
38#✻%$	16172ZE3W10	COLLAR SET	1	
40#✻%$	16141Z0S003	DRAIN WASHER, FLAT (6.2X10.7)	1	INCLUDES ITEM W/◗

NOTICE

◊ Honda GX390K1SM32

♣ Honda GX390U1SM32

❖ Honda GX390UT2SM32

♦ Honda GX390UT2SCM1

HONDA GX390 SERIES ENG. — AIR CLEANER ASSY. (STD.)

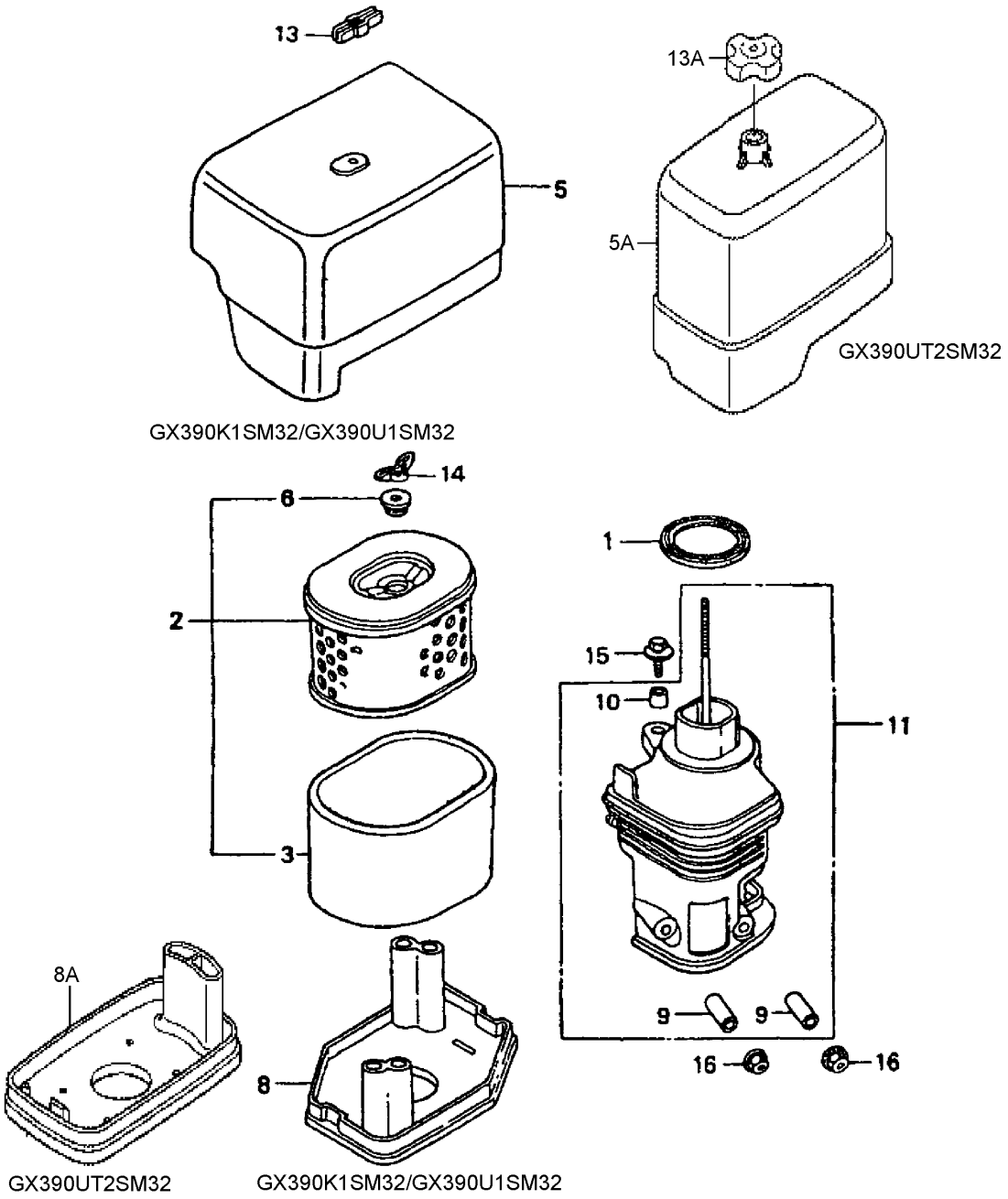

HONDA GX390 SERIES ENG. — AIR CLEANER ASSY. (STD.)

NO.	PART NO.	PART NAME	QTY.	REMARKS
1◊♣	16271ZE2010	PACKING, ELBOW	1	
1❖	17417Z5T000	PACKING, ELBOW	1	
2	17210ZE3505	ELEMENT, AIR CLEANER	1	INCLUDES ITEMS W/%
3%	17218ZE3505	FILTER, OUTER	1	
5◊♣	17231ZE3W001	COVER, AIR CLEANER	1	
5A❖	17231Z5T000	COVER, AIR CLEANER	1	
6%	17232891000	GROMMET, AIR CLEANER	1	
8◊♣	17235ZH9N001	NOSE, SILENCER	1	
8A❖	17235Z5T000	NOSE, SILENCER	1	
9$	17238ZE2310	COLLAR, AIR CLEANER	2	
10$	17239ZE1000	COLLAR (B), AIR CLEANER	1	
11◊♣	17410ZH9N00	ELBOW COMP., AIR CLEANER	1	INCLUDES ITEMS W/$
11❖	17410Z5T000	ELBOW COMP., AIR CLEANER	1	INCLUDES ITEMS W/$
13◊♣	0037806000	NUT, WING 6MM, BLACK	1	REPLACES P/N 90203ZA0800
13A❖	90202Z2E000	KNOB, AIR CLEANER COVER	1	
14	90325044000	WING NUT	2	
15◊♣	90009ZE2003	BOLT-WASHER 6X22	1	
15❖	90009Z1C000	BOLT-WASHER 6X22	1	
16	9405006000	NUT, FLANGE 6MM	2	

NOTICE

◊ Honda GX390K1SM32

♣ Honda GX390U1SM32

❖ Honda GX390UT2SM32

HONDA GX390UT2SCM1 ENG. — AIR CLEANER ASSY. (CYCLONE)

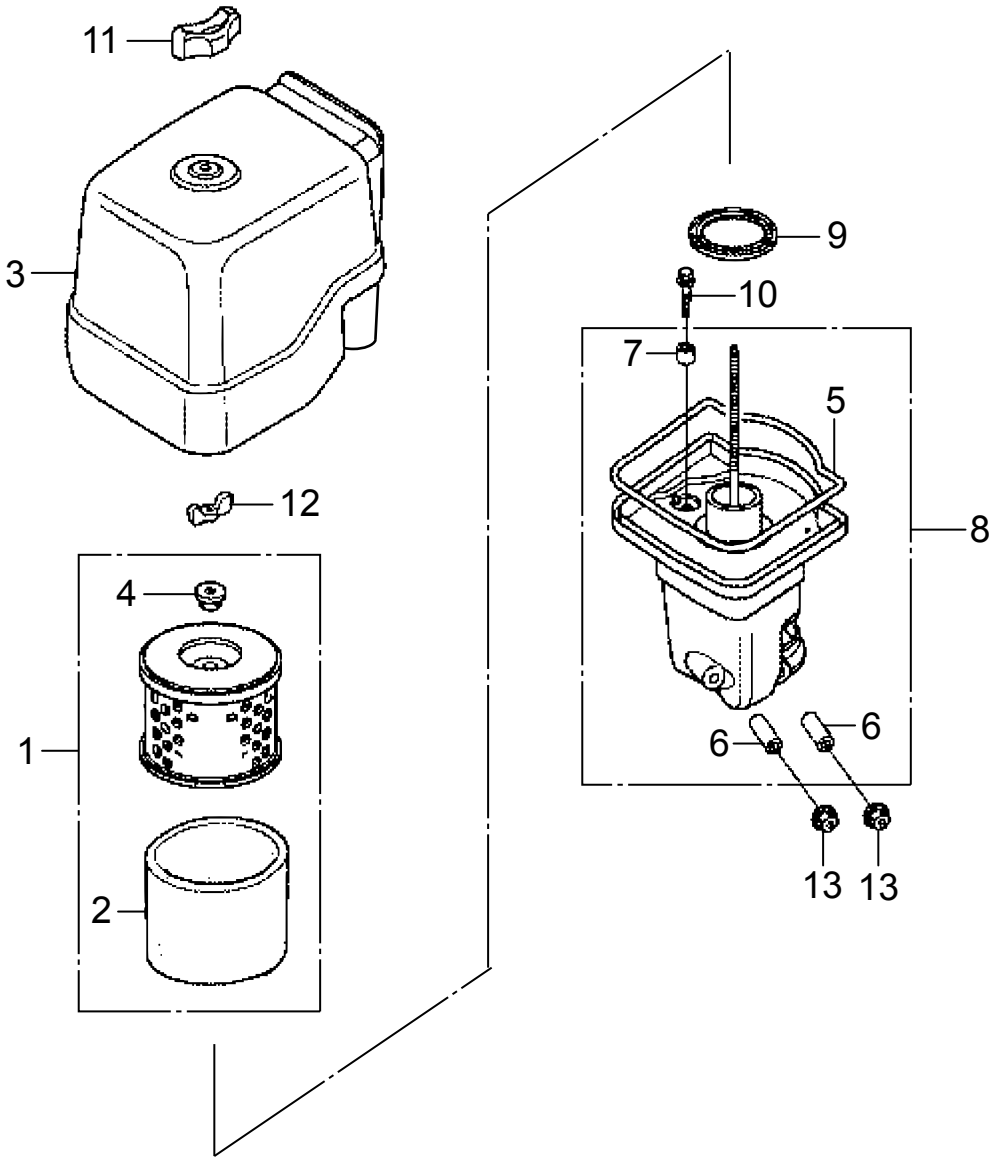

HONDA GX390UT2SCM1 ENG. — AIR CLEANER ASSY. (CYCLONE)

NO.	PART NO.	PART NAME	QTY.	REMARKS
1	17210Z1C781	ELEMENT, AIR CLEANER	1	INCLUDES ITEMS W/%
2%	17218Z1C780	FILTER, OUTER	1	
3	17230Z1C780	COVER ASSY., AIR CLEANER	1	
4%	17232891000	GROMET, AIR CLEANER	1	
5$	17233Z1C780	SEAL, AIR CLEANER COVER	1	
6$	17238ZE2310	COLLAR, AIR CLEANER	2	
7$	17239ZE3840	COLLAR B, AIR CLEANER	1	
8	17410Z1C780	ELBOW CP., AIR CLEANER	1	INCLUDES ITEMS W/$
9	17417Z5T000	PACKING, AIR CLEANER CASE	1	
10	90009Z1C000	BOLT-WASHER 6X22	1	
11	90300Z4M800	WING-NUT, AIR CLEANER	1	
12	90325044000	WING-NUT, TOOL BOX SETTING	1	
13	9405006000	FLANGE NUT 6MM	2	

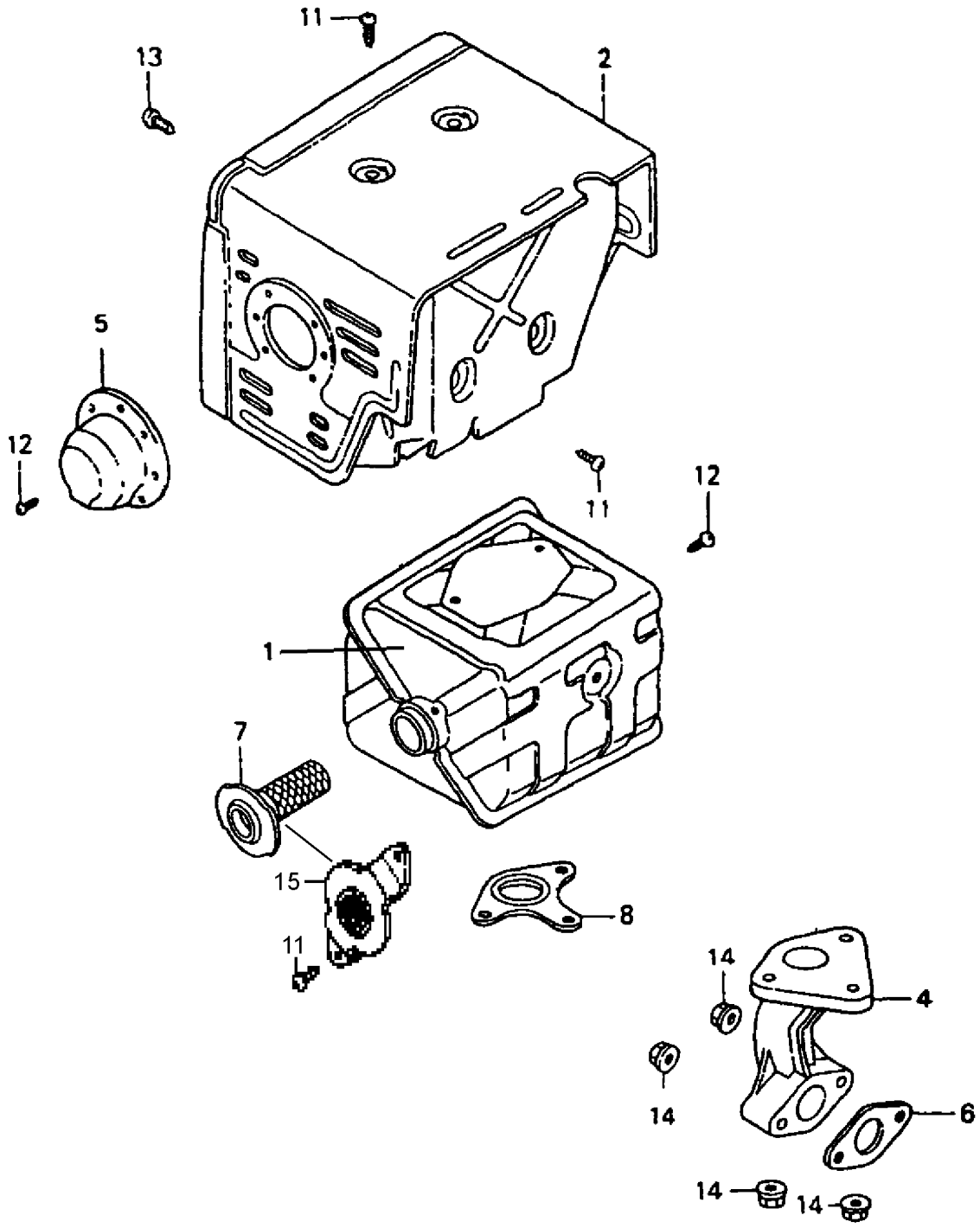
11
13
2
5
12
11
12
1
7
15
8
11
14
4
14
6
14
14

NO.	PART NO.	PART NAME	QTY.	REMARKS
1◊♣	18310ZE2W61	MUFFLER COMP.	1	
1❖	18310Z5T000	MUFFLER COMP.	1	
1♦	18310-Z5T-010	MUFFLER COMP.	1	
2◊♣	18320ZE2W62	PROTECTOR COMP., MUFFLER	1	REPLACES P/N 18320ZE2W61
2❖♦	18320Z5T000	PROTECTOR COMP., MUFFLER	1	
4◊♣	18330ZE2W00	PIPE, EXHAUST	1	
4❖♦	18331Z5T000	PIPE, EXHAUST	1	
5	18331ZE3811	CAP, MUFFLER	1	
6	18333ZF6W01	GASKET, EX. PIPE	1	
6♦	18333-Z1C-901	GASKET, EX. PIPE	1	
7◊♣	18355ZE2W00	ARRESTER, SPARK	1	
7❖♦	18350Z5T800	ARRESTER, SPARK	1	
8◊♣	18381ZE2W10	GASKET, MUFFLER ARRESTER	1	
8❖♦	18381ZE2801	GASKET, MUFFLER ARRESTER	1	
11	90050ZE1000	TAPPING SCREW 5X8	4	
12	90055ZE1000	TAPPING SCREW 4X6	3	
13	90006ZE2000	TAPPING SCREW 6X10	1	
14	9405008000	FLANGE NUT M8	5	
15❖	18336ZE3000	FLANGE COMP., BAFFLE	1	

NOTICE

◊ Honda GX390K1SM32

♣ Honda GX390U1SM32

❖ Honda GX390UT2SM32

♦ Honda GX390UT2SCM1

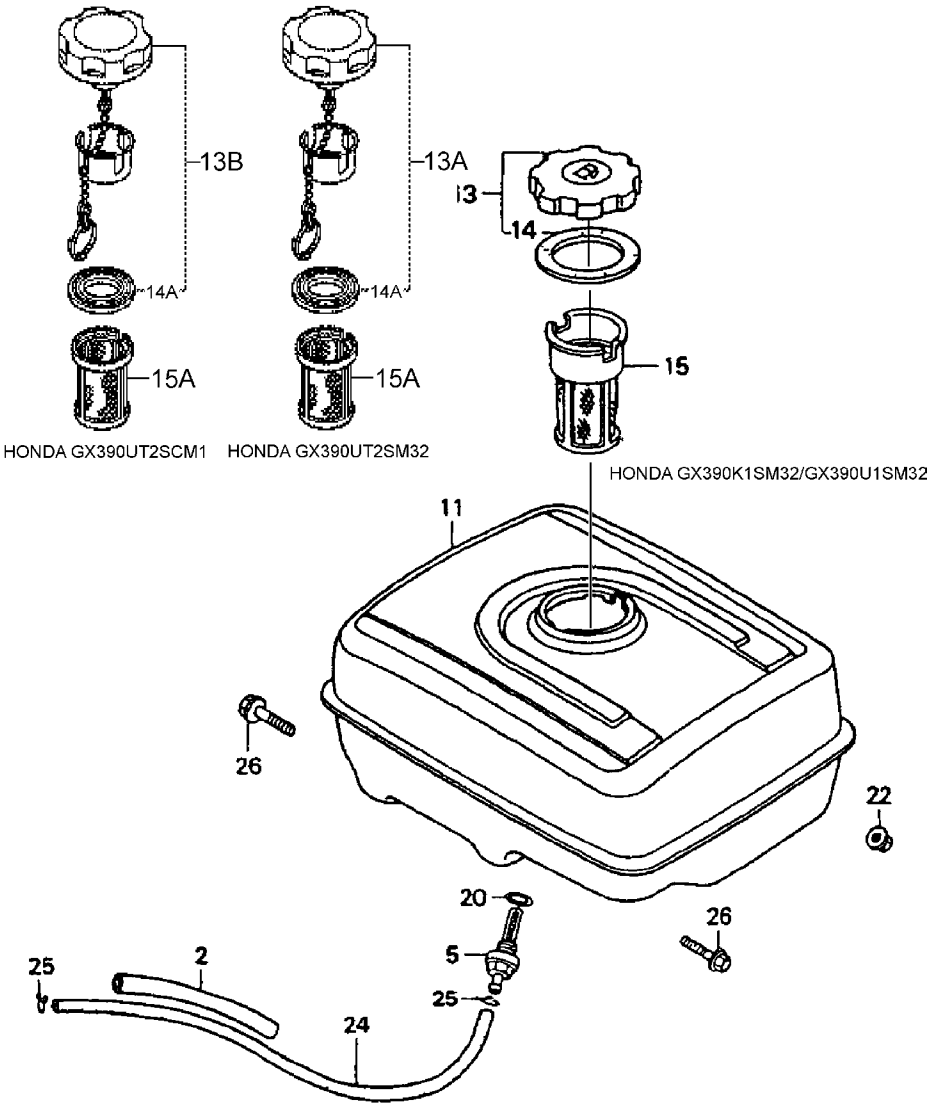
13B
13A
13
14
14A
14A
15A
15A
15
HONDA GX390UT2SCM1
HONDA GX390UT2SM32
HONDA GX390K1SM32/GX390U1SM32
11
26
22
20
26
5
25
2
25
24

HONDA GX390 SERIES ENGINE — FUEL TANK ASSY.

NO.	PART NO.	PART NAME	QTY.	REMARKS
2	16854ZH8000	RUBBER, SUPPORT (107MM)	1	
5◊♣	16955ZE1000	JOINT, FUEL TANK	1	
5❖♦	16955ZE1010	JOINT, FUEL TANK	1	
11◊♣	17510ZE3030ZA	TANK COMP., FUEL, NH1 (BLACK)	1	REPLACES P/N 17510ZE3010ZA
11❖♦	17510Z5T000ZA	TANK COMP., FUEL, NH1 (BLACK)	1	
13◊♣	17620ZH7023	FUEL TANK CAP CP	1	INCLUDES ITEMS W/#
13A❖	17620Z4H030	FUEL TANK CAP CP	1	INCLUDES ITEMS W/%
13B♦	17620Z4H900	FUEL TANK CAP CP	1	INCLUDES ITEMS W/$
14◊#	17631329003	GASKET	1	REPLACES P/N 17631ZH7003
14A❖♦%$	17631Z0T801	GASKET	1	
15◊	17672ZE2W01	FUEL FILTER	1	
15A♣❖♦	17672Z4H000	FUEL FILTER	1	
20	91353671003	O-RING 14MM	1	REPLACES P/N 91353671004
22	9405008000	FLANGE NUT M8	2	
24◊	950014523540	TUBE, FUEL 4.5X235	1	
24♣	91424Z5L802	TUBE, FUEL 4.5X235	1	REPLACES P/N 91424Z5L801
24❖♦	91424Z5T003	TUBE, FUEL 4.5X235	1	
25◊	9500202080	CLIP, TUBE	2	
25♣❖♦	950024080008	CLIP, TUBE	2	
26	957010802500	FLANGE BOLT 8X25	2	

NOTICE

◊ Honda GX390K1SM32

♣ Honda GX390U1SM32

❖ Honda GX390UT2SM32

♦ Honda GX390UT2SCM1

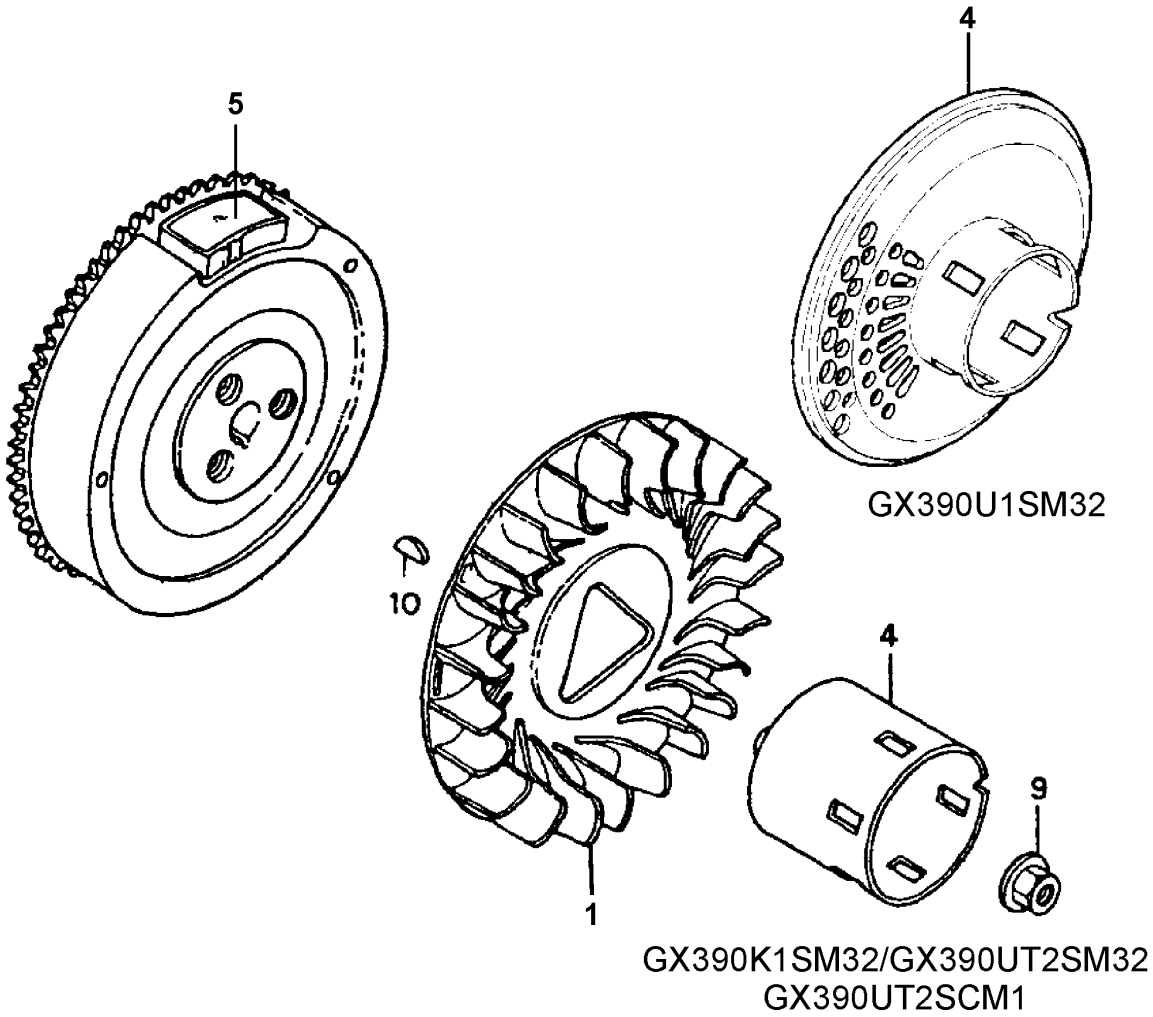
4
5
GX390U1SM32
10
4
9
1
GX390K1SM32/GX390UT2SM32
GX390UT2SCM1

NO.	PART NO.	PART NAME	QTY.	REMARKS
1	19511ZE3000	FAN, COOLING	1	
4◊❖♦	28451ZE3W01	PULLEY, STARTER	1	
4♣	28450ZE3W11	PULLEY, STARTER	1	
5◊♣	31100ZE3W01	FLYWHEEL COMP.	1	
5❖♦	31110Z5T840	FLYWHEEL COMP.	1	
9	90201ZE3V00	NUT, SPECIAL 16MM	1	
10	90741ZE2000	KEY, SPECIAL WOODRUFF 25X18	1	

NOTICE

◊ Honda GX390K1SM32

♣ Honda GX390U1SM32

❖ Honda GX390UT2SM32

♦ Honda GX390UT2SCM1

HONDA GX390 SERIES ENGINE — IGNITION COIL ASSY.

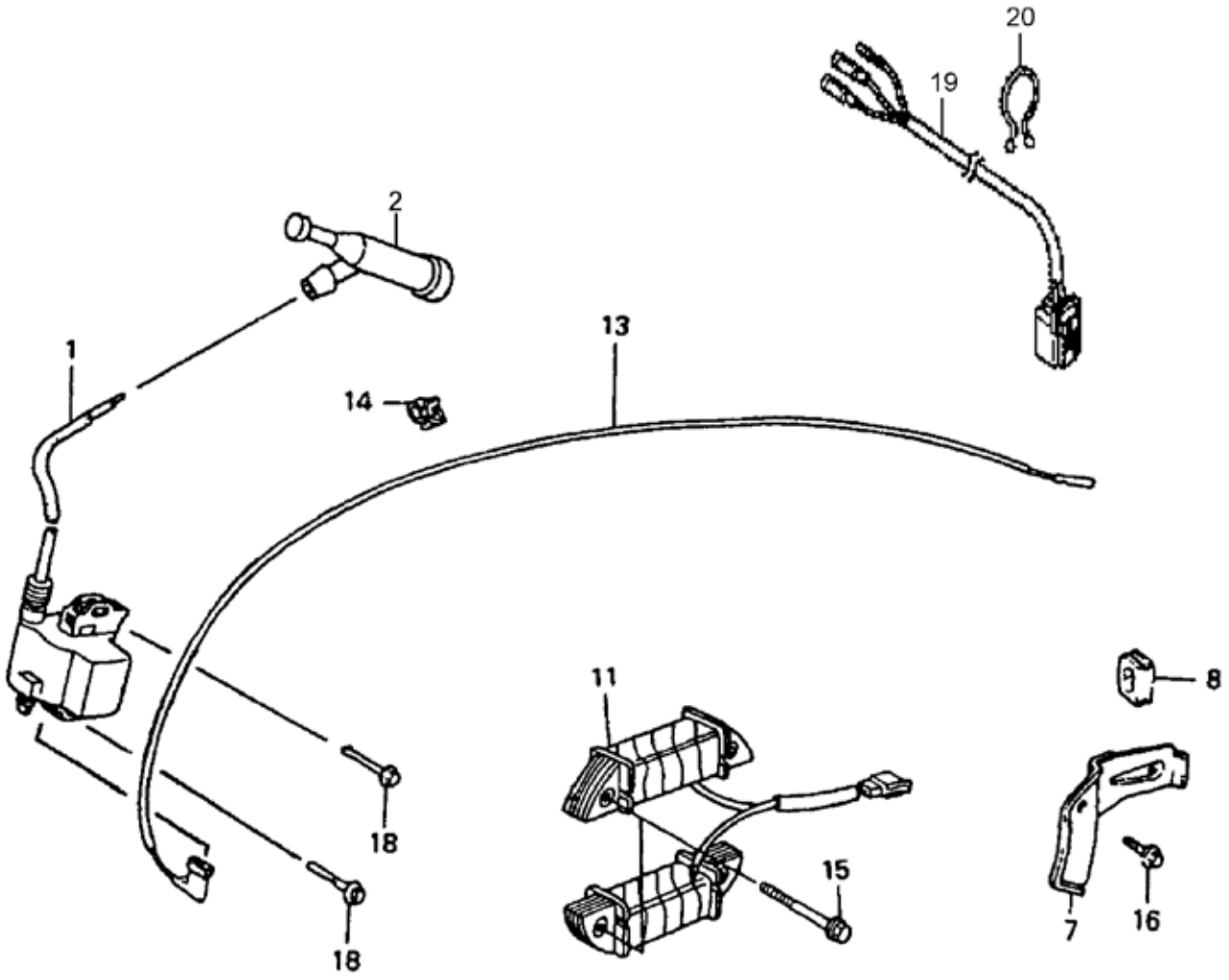

HONDA GX390 SERIES ENGINE — IGNITION COIL ASSY.

NO.	PART NO.	PART NAME	QTY.	REMARKS
1◊♣	30500ZF6W03	COIL ASSY., IGNITION	1	
1❖♦	30500Z5T003	COIL ASSY., IGNITION	1	
2◊♣	30600ZE1013	SPARK PLUG CAP	1	
2❖	30600ZE1013	SPARK PLUG CAP	1	
2♦	30700-Z1C-813	SPARK PLUG CAP	1	
7	31511ZE3000	CLAMPER, CORD	1	
8	31512ZE2000	GROMMET, CORD	1	
11	31630ZE2861	COIL ASSY., CHARGE (10A)	1	
13◊♣	36101ZE2701	CORD, STOP SWITCH (430MM)	1	
14◊♣	36103ZE1000	HOLDER, STOP SWITCH CORD	1	
15	90012888000	FLANGE BOLT	4	
16	90013883000	FLANGE BOLT 6X12	1	
18	90015883000	FLANGE BOLT 6X28	2	
19	2110Z5T810	HARNESS ASSY., ENGINE WIRE	1	
19♦	32110-Z5K-810	HARNESS ASSY., ENGINE WIRE	1	
20	90630751000	CLIP, PURSE LOCK	1	

NOTICE

◊ Honda GX390K1SM32

♣ Honda GX390U1SM32

❖ Honda GX390UT2SM32

♦ Honda GX390UT2SCM1

HONDA GX390 SERIES ENGINE — STARTER MOTOR ASSY.

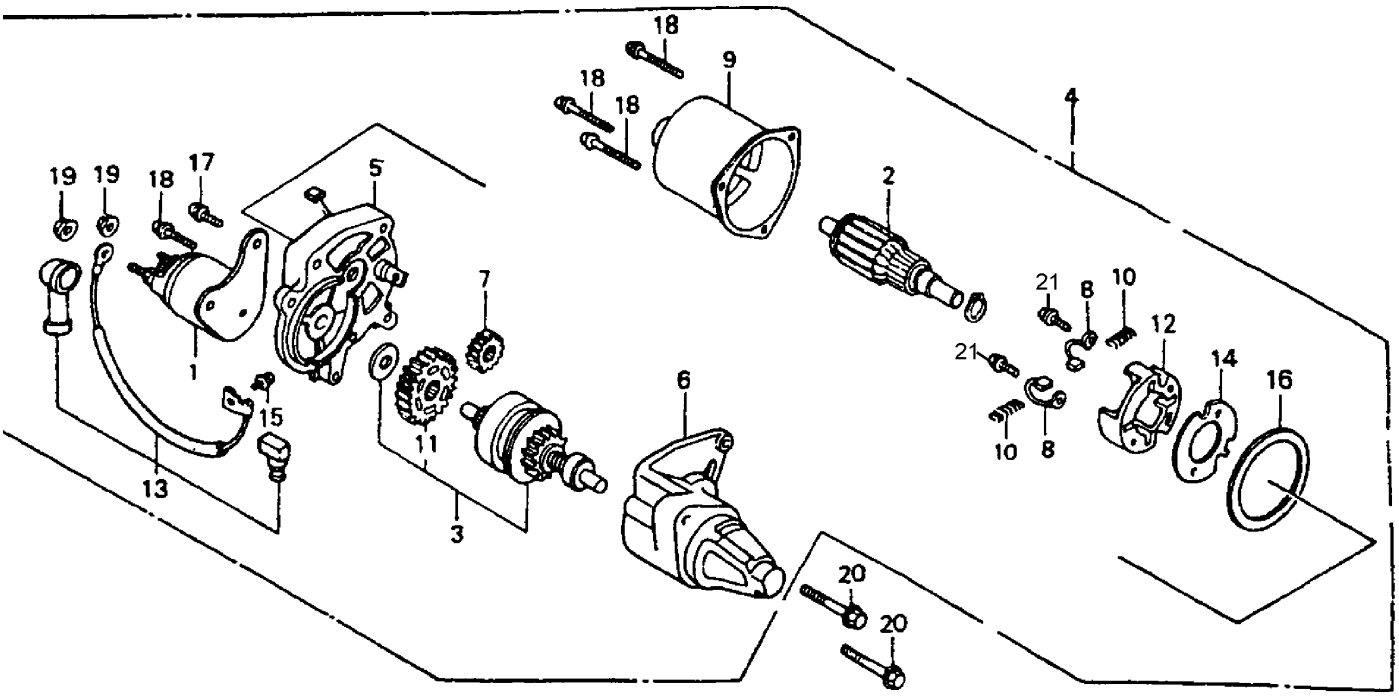

HONDA GX390 SERIES ENGINE — STARTER MOTOR ASSY.

NO.	PART NO.	PART NAME	QTY.	REMARKS
1#	31204ZA0003	CONTACTOR ASSY.	1	
2#	31206ZE3003	ARMATURE COMP.	1	
3#	31207ZE3003	CLUTCH COMP., OVERRUN	1	
4	31210ZE3023	MOTOR UNIT, STARTER	1	INCLUDES ITEMS W/# REPLACES P/N 31210ZE3013
5#	31211ZE2003	BRACKET, CENTER	1	
6#	31212ZE3003	BRACKET, FRONT	1	
7#	31213ZE2003	GEAR, DRIVE PINION	1	
8#	31215ZE2003	BRUSH	2	
9#	31218ZE3003	YOKE COMP.	1	
10#	31219ZE2003	SPRING, BRUSH RETURN	4	
11#	31222ZE3791	GEAR, REDUCTION	1	
12#	31231ZE2003	HOLDER, BRUSH	1	
13#	31232ZE3003	WIRE, WATER COVER	1	
14#	31233ZE2003	INSULATOR	1	
15#	90110ZE2003	SCREW-WASHER 4X6	1	
16#	91601ZE2003	PACKING	1	
17#	90007ZE2003	BOLT, WASHER 5X14	2	
18#	938920503208	SCREW-WASHER 5X32	4	REPLACES P/N 938920503218
19#	9407006080	NUT-WASHER 6MM	2	
20	957010803508	FLANGE BOLT 8X35	2	
21#	31219ZE3003	SCREW, WASHER, 4X14	2	

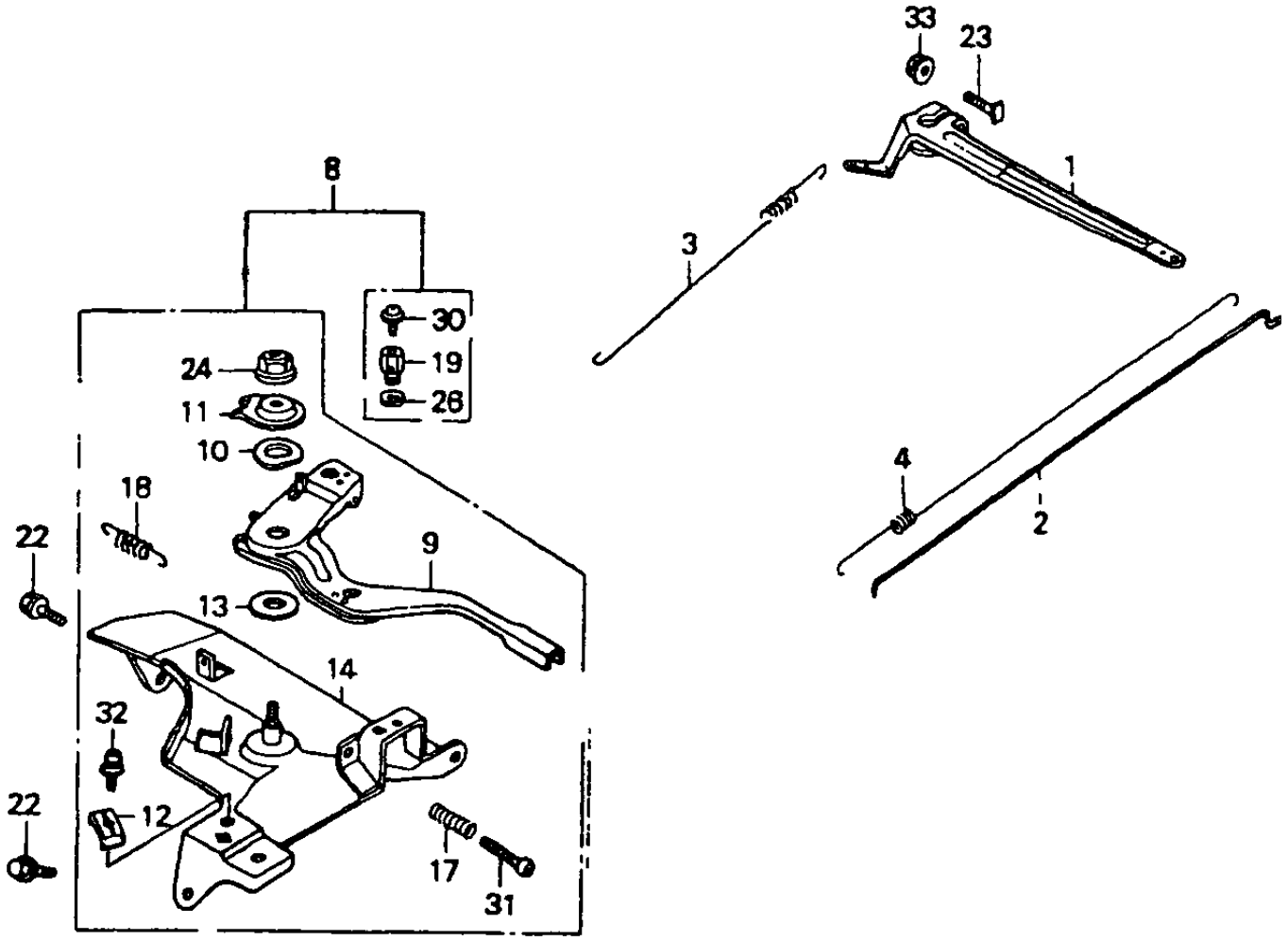
33
23
8
1
3
30
24
19
11
26
10
4
18
2
22
9
13
14
32
22
12
17
31

NO.	PART NO.	PART NAME	QTY.	REMARKS
1	16551ZE3000	ARM, GOVERNOR	1	
2	16555ZE3000	ROD, GOVERNOR	1	
3	16561ZE3000	SPRING, GOVERNOR	1	
4	16562ZE3000	SPRING, THROTTLE RETURN	1	
8◊♣	16570ZE3W10	CONTROL ASSY. (REMOTE)	1	INCLUDES ITEMS W/#
8❖	16500Z5T306	CONTROL ASSY. (REMOTE)	1	INCLUDES ITEMS W/%
8♦	16500-Z5T-800	CONTROL ASSY. (REMOTE)	1	INCLUDES ITEMS W/$
9#%$	16571ZE3W00	LEVER, CONTROL	1	
10#%$	16574ZE1000	LEVER SPRING	1	
11#%$	16575ZE2W00	WASHER, CONTROL LEVER	1	
12#%$	16576891000	HOLDER, CABLE	1	
13#%$	16578ZE1000	SPACER, CONTROL LEVER	1	
14#	16581ZE3W00	BASE COMP., CONTROL	1	
14%$	16580Z5T000	BASE COMP., CONTROL	1	
17#%$	16584883300	ADJUSTING SPRING	1	
18#%$	16592883310	SPRING, CABLE RETURN	1	
19#%$	16594883010	WIRE HOLDER	1	
22	90013883000	FLANGE BOLT 6X12	2	
23◊♣	90015ZE5010	BOLT, GOVERNOR ARM	1	
23❖♦	90015Z5T000	BOLT, GOVERNOR ARM	1	
24#% $	90114SA0000	LOCK NUT 6MM	1	
26#%$	90605230000	CIR CLIP 5MM	1	
30#%$	0043504060	SCREW 4X6	1	REPLACES P/N 93500040060H
31#%$	93500050320A	PAN SCREW 5X32	1	
32#%$	0202005T125	SCREW 5X16	1	REPLACES P/N 93500050160A
33	9405006000	FLANGE NUT 6MM	1	

NOTICE

◊ Honda GX390K1SM32

♣ Honda GX390U1SM32

❖ Honda GX390UT2SM32

♦ Honda GX390UT2SCM1

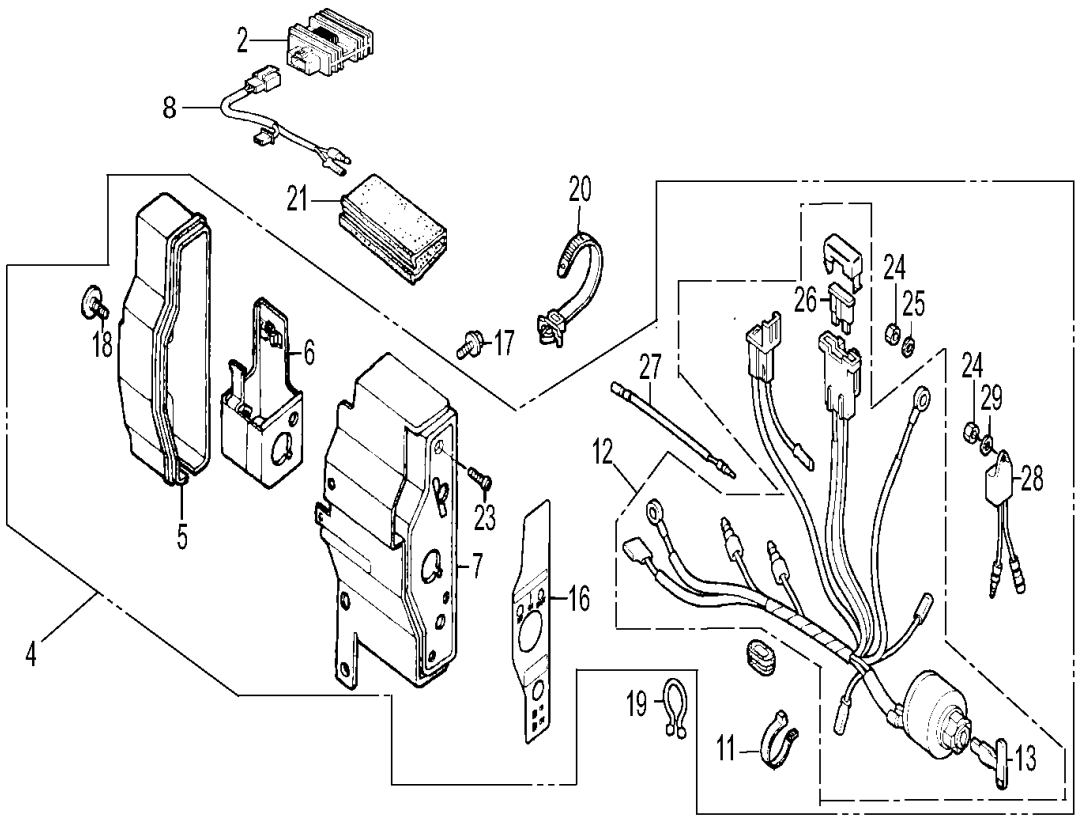
2
8
21
20
18
6
17
24
26
25
27
24
29
12
28
23
5
7
16
4
19
11
13

HONDA GX390 SERIES ENGINE — CONTROL BOX ASSY.

NO.	PART NO.	PART NAME	QTY.	REMARKS
2	31600ZE2861	REGULATOR ASSY., RECTIFER	1	
4◊	31610ZE3W33ZA	BOX ASSY., CONTROL, NH1 (BLACK)	1	INCLUDES ITEMS W/#
4♣	31610Z5S821ZB	BOX ASSY., CONTROL, R280 (RED)	1	INCLUDES ITEMS W/%
4❖	31610Z5T831ZA	BOX ASSY., CONTROL, NH1 (BLACK)	1	INCLUDES ITEMS W/$
4♦	31610Z5T831ZA	BOX ASSY., CONTROL, NH1 (BLACK)	1	INCLUDES ITEMS W/&
5#%$	31612ZE2003	CASE, CONTROL	1	
6#%$	31614ZE2003	BRACKET, CASE MOUNTING	1	
7#%$	31615ZE3003ZE	PANEL COMP., CONTROL, R280 (RED)	1	
7&	31615ZE3003ZA	PANEL COMP., CONTROL, (BLACK)	1	
8	32110ZE2860	HARNESS ASSY. SUB WIRE	1	
11#%$&	32902892003	BAND	1	
12#%	35100ZE2862	SW. ASSY., COMBINATION	1	INCLUDES ITEMS 13 AND 26
12$&	35100Z5T831	SW. ASSY., COMBINATION	1	INCLUDES ITEMS 13 AND 26
13#%$&	35111880013	KEY COMP.	2	REPLACES P/N 35111880003
16#	887529ZE2860	MARK, CONTROL BOX (	1	
16%	87529Z4T840	MARK, CONTROL BOX	1	
16$&	87529Z4S820	MARK, CONTROL BOX	1	
17	90013883000	FLANGE BOLT 6X12	2	
18	90380MA6010	SCREW, SPECIAL 6X12	1	
19	90630751000	CLIP, PURSE LOCK	1	
20	90672SA0003	STRAP, CABLE 118MM	1	
21	91406ZE2003	TUBE, FASTENER 30MM	1	
23#%$&	93500040120H	PAN SCREW 4X12	1	
24#%$&	94001043900S	NUT, HEX. 4MM	1	
25#%$&	9411104800	WASHER, LOCK 4MM	1	
26#%$&	9820031500	FUSE, BLADE (15A)	1	
27#%$	32197ZE1003	SUB HARNESS	1	NOT USED ON ♦ ENGINE
28#%$	34150ZH7003	ALERT UNIT, OIL	1	NOT USED ON ❖ ♦ ENGINES
29#%$	9410104800	WASHER, FLAT 4MM	1	NOT USED ON ♦ ENGINE

NOTICE

◊ Honda GX390K1SM32

♣ Honda GX390U1SM32

❖ Honda GX390UT2SM32

♦ Honda GX390UT2SCM1

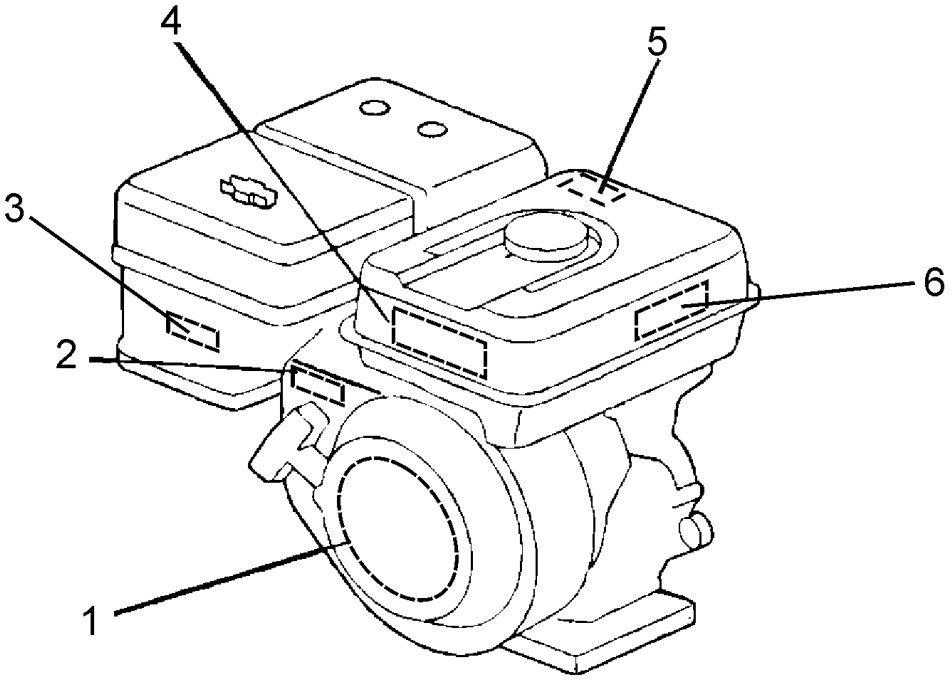
4
5
3
6
2
1

NO.	PART NO.	PART NAME	QTY.	REMARKS
1◊	87521ZF6W01	EMBLEM	1	
1♣	87521ZF6W04	EMBLEM	1	
1❖♦	87521Z5T000	EMBLEM	1	
2	87532ZH7000	MARK, THROTTLE INDICATION	1	
3◊	87528ZE2810	MARK, CHOKE (ORANGE)	1	
3❖	87528Z5T000	MARK, CHOKE	1	
3♦	87528Z4M000	MARK, CHOKE	1	
4◊	87522ZH9010	LABEL, OPERATOR CAUTION	1	
4♣	87516ZH7010	LABEL, OPERATOR CAUTION	1	
4❖	87519Z4H000	LABEL, OPERATOR CAUTION	1	
4♦	8751-Z4H000	LABEL, OPERATOR CAUTION	1	
5♣	87539Z0J000	MARK, EX, CAUTION (ENGLISH)	1	
6◊	87532ZH8810	MARK, OIL ALERT	1	

NOTICE

◊ Honda GX390K1SM32

♣ Honda GX390U1SM32

❖ Honda GX390UT2SM32

♦ Honda GX390UT2SCM1

PARTS MANUAL

HERE'S HOW TO GET HELP

PLEASE HAVE THE MODEL AND SERIAL
NUMBER ON-HAND WHEN CALLING

UNITED STATES

Multiquip Inc.

(310) 537- 3700
6141 Katella Avenue Suite 200
Cypress, CA 90630
E-MAIL: mq@multiquip.com
WEBSITE: www.multiquip.com

CANADA

Multiquip

(450) 625-2244
4110 Industriel Boul.
Laval, Quebec, Canada H7L 6V3
E-MAIL: infocanada@multiquip.com

UNITED KINGDOM

Multiquip (UK) Limited Head Office

0161 339 2223
Unit 2, Northpoint Industrial Estate,
Globe Lane,
Dukinfield, Cheshire SK16 4UJ
E-MAIL: sales@multiquip.co.uk

© COPYRIGHT 2020, MULTIQUIP INC.

Multiquip Inc, the MQ logo are registered trademarks of Multiquip Inc. and may not be used, reproduced, or altered without written permission. All other trademarks are the property of their respective owners and used with permission.

This manual MUST accompany the equipment at all times. This manual is considered a permanent part of the equipment and should remain with the unit if resold.

The information and specifications included in this publication were in effect at the time of approval for printing. Illustrations, descriptions, references and technical data contained in this manual are for guidance only and may not be considered as binding. Multiquip Inc. reserves the right to discontinue or change specifications, design or the information published in this publication at any time without notice and without incurring any obligations.

MULTIQUIP®