PARTS MANUAL

MULTIQUIP®

Mikasa SERIES

MODEL MTX-60

TAMPING RAMMER

(HONDA GX100UKRBF GASOLINE ENGINE)

Revision #9 (11/18/21)

To find the latest revision of this publication or associated operation manual, visit our website at: www.multiquip.com

THIS MANUAL MUST ACCOMPANY THE EQUIPMENT AT ALL TIMES.

MTX-60 Tamping Rammer

Explanation Of Code In Remarks Column..... 4
Suggested Spare Parts 5

Component Drawings

Nameplate And Decals..... 6-7
Crankcase And Engine Assembly 8-11
Guide Cylinder Assembly 12-13
Foot Assembly..... 14-15
Fuel Tank And Handle Assembly..... 16-17
Combination Lever Assembly 18-19
Engine Service Parts..... 20-21

NOTICE

Specifications and part numbers are subject to change without notice.

NOTES

EXPLANATION OF CODE IN REMARKS COLUMN

The following section explains the different symbols and remarks used in the Parts section of this manual. Use the help numbers found on the back page of the manual if there are any questions.

> ***NOTICE***
>
> The contents and part numbers listed in the parts section are subject to change **without notice**. Multiquip does not guarantee the availability of the parts listed.

SAMPLE PARTS LIST

NO.	PART NO.	PART NAME	QTY.	REMARKS
1	12345	BOLT	1	INCLUDES ITEMS W/%
2%		WASHER, 1/4 IN.		NOT SOLD SEPARATELY
2%	12347	WASHER, 3/8 IN.	1	MQ-45T ONLY
3	12348	HOSE	A/R	MAKE LOCALLY
4	12349	BEARING	1	S/N 2345B AND ABOVE

NO. Column

Unique Symbols — All items with same unique symbol (@, #, +, %, or >) in the number column belong to the same assembly or kit, which is indicated by a note in the "Remarks" column.

Duplicate Item Numbers — Duplicate numbers indicate multiple part numbers, which are in effect for the same general item, such as different size saw blade guards in use or a part that has been updated on newer versions of the same machine.

> ***NOTICE***
>
> When ordering a part that has more than one item number listed, check the remarks column for help in determining the proper part to order.

PART NO. Column

Numbers Used — Part numbers can be indicated by a number, a blank entry, or TBD.

TBD (To Be Determined) is generally used to show a part that has not been assigned a formal part number at the time of publication.

A blank entry generally indicates that the item is not sold separately or is not sold by Multiquip. Other entries will be clarified in the "Remarks" Column.

QTY. Column

Numbers Used — Item quantity can be indicated by a number, a blank entry, or A/R.

A/R (As Required) is generally used for hoses or other parts that are sold in bulk and cut to length.

A blank entry generally indicates that the item is not sold separately. Other entries will be clarified in the "Remarks" Column.

REMARKS Column

Some of the most common notes found in the "Remarks" Column are listed below. Other additional notes needed to describe the item can also be shown.

Assembly/Kit — All items on the parts list with the same unique symbol will be included when this item is purchased.

Indicated by:

"INCLUDES ITEMS W/(unique symbol)"

Serial Number Break — Used to list an effective serial number range where a particular part is used.

Indicated by:

"S/N XXXXX AND BELOW"
"S/N XXXX AND ABOVE"
"S/N XXXX TO S/N XXX"

Specific Model Number Use — Indicates that the part is used only with the specific model number or model number variant listed. It can also be used to show a part is NOT used on a specific model or model number variant.

Indicated by:

"XXXXX ONLY"
"NOT USED ON XXXX"

"Make/Obtain Locally" — Indicates that the part can be purchased at any hardware shop or made out of available items. Examples include battery cables, shims, and certain washers and nuts.

"Not Sold Separately" — Indicates that an item cannot be purchased as a separate item and is either part of an assembly/kit that can be purchased, or is not available for sale through Multiquip.

MTX-60 TAMPING RAMMER WITH HONDA GX100UKRBF GASOLINE ENGINE

1 to 3 units

Qty.	P/N	Description
1	956100062	THROTTLE WIRE
3	366010070	PRIMARY ELEMENT, AIR CLEANER
3	366010080	SECONDARY ELEMENT, AIR CLEANER
1	366345570	CAP, FUEL TANK W/ STRAP
2	16910Z4ES21	FILTER, IN-LINE FUEL
3	9805655757	SPARK PLUG
1	959300770	STRAINER, FUEL TANK
1	28462Z0DV02	ROPE, RECOIL STARTER
1	28461ZH8003	GRIP, RECOIL STARTER
1	368346180	BELLOWS, ORANGE
2	368347520	BELLOWS CLAMP (TOP)
2	368347530	BELLOWS CLAMP (BOTTOM)

NOTICE

Part numbers on this Suggested Spare Parts list may supersede/replace the part numbers shown in the following parts lists.

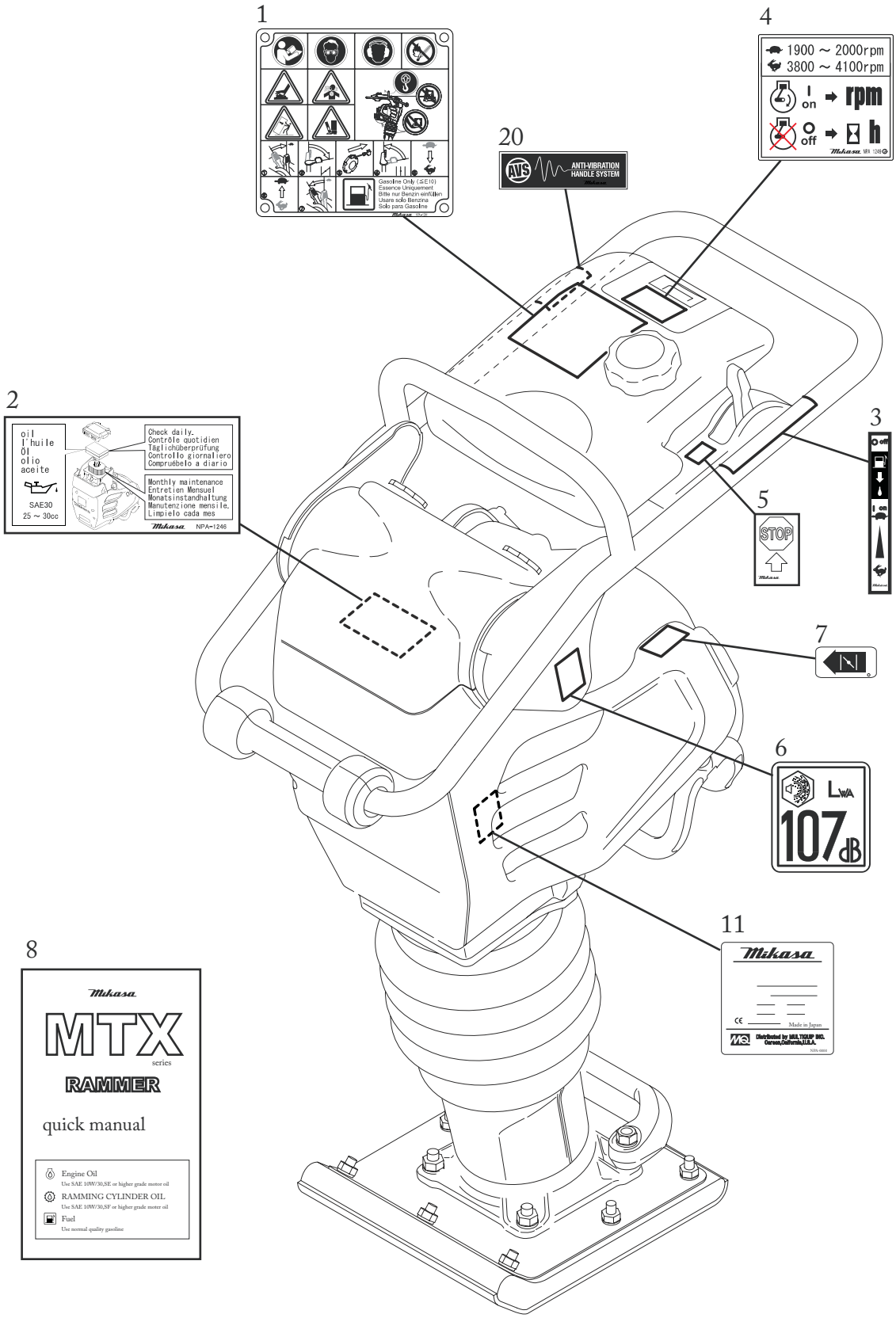
1
Gasoline Only (SE10)
Essence Uniquement
Bitte nur Benzin einfüllen
Usare solo Benzina
Solo para Gasoline
4
1900 ~ 2000rpm
3800 ~ 4100rpm
on
rpm
off
h
20
AVS
ANTI-VIBRATION HANDLE SYSTEM
2
oil
l'huile
Öl
olio
aceite
SAE30
25 ~ 30cc
Check daily.
Contrôle quotidien
Täglichüberprüfung
Controllo giornaliero
Compruébelo a diario
Monthly maintenance
Entretien Mensuel
Monatsinstandhaltung
Manutenzione mensile.
Limpielo cada mes
Mikasa NPA-1246
3
5
STOP
7
6
LWA
107dB
11
Mikasa
Made in Japan
8
Mikasa
MTX
series
RAMMER
quick manual
Engine Oil
Use SAE 10W/30,SE or higher grade motor oil
RAMMING CYLINDER OIL
Use SAE 10W/30,SF or higher grade motor oil
Fuel
Use normal quality gasoline

NAMEPLATE AND DECALS ASSY.

NO.	PART NO.	PART NAME	QTY.	REMARKS
1	920212910	OPERATION DECAL	1	
2	920212460	AIR CLEANER DECAL	1	NPA-1246
3	920212470	LEVER OPERATION DECAL	1	
4	920212490	MAX SPEED DECAL 4100	1	
5	920212480	MACHINE STOP DECAL	1	
6	920210310	EC NOISE REQ. DECAL LWA107	1	
7	920212840	CHOKE OPERATION DECAL	1	
8	920212540	QUICK MANUAL	1	
11		SERIAL PLATE NO.	1	CONTACT MQ PARTS DEPT.
20	920212520	ANTI- VIB. HANDLE DECAL	1	

CRANKCASE AND ENGINE ASSY.

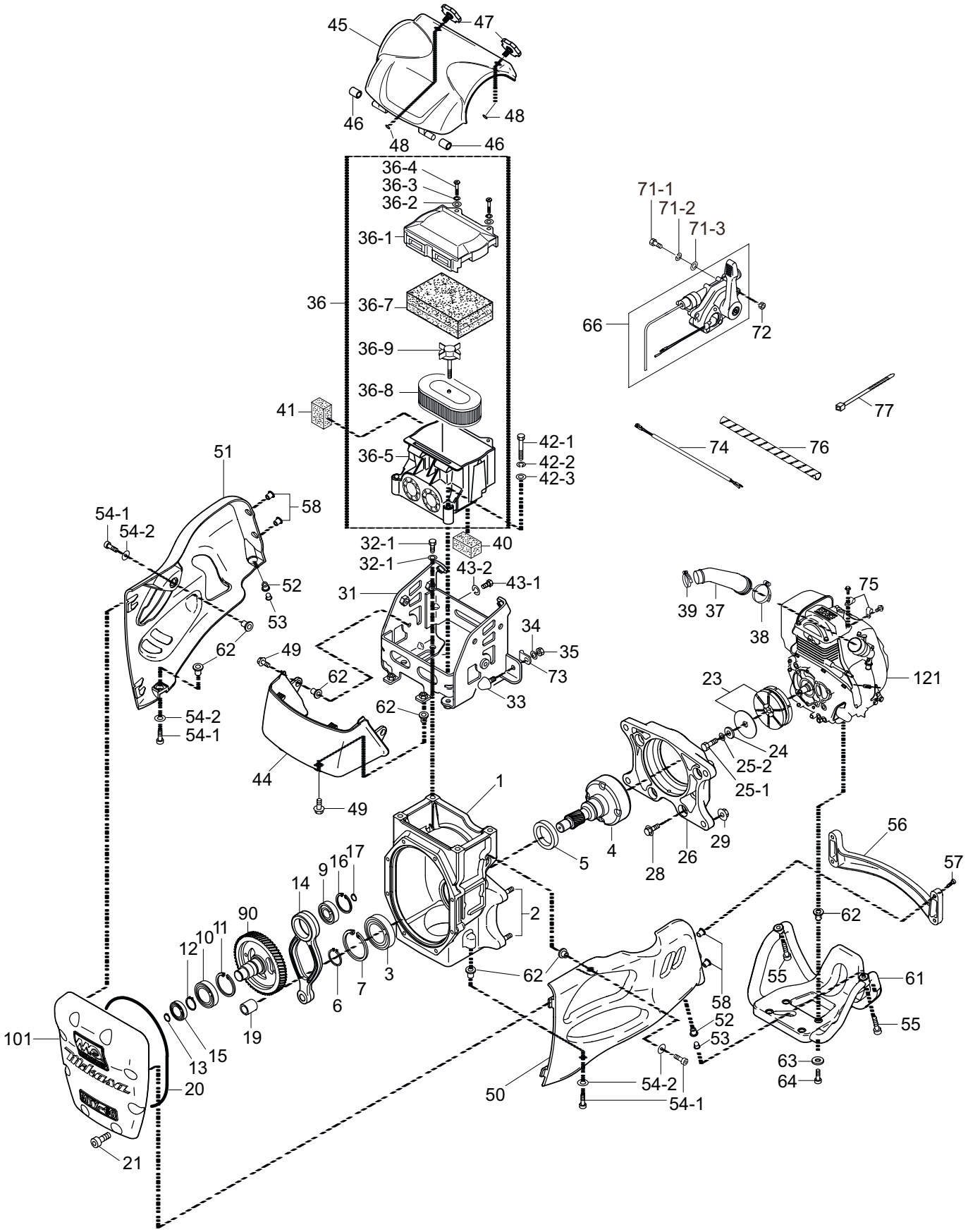

NO.	PART NO.	PART NAME	QTY.	REMARKS
1	368119170	CRANKCASE CP	1	INCLUDES ITEM W/$
2*	009120204	STUD BOLT 10X50X21T/21S	4	
3	041006007	BEARING 6007Z	1	
4	368347410	PINION DRUM	1	
5	060404010	OIL SEAL TC - 40528	1	
6	080200350	STOP RING S-35	1	
7	080100620	STOP RING R-62	1	
9	040006304	BEARING 6304	1	
10	040006305	BEARING 6305	1	
11	080100620	STOP RING R62	1	
12	080200170	STOP RING S-17	1	
13	080200250	STOP RING R-62	1	
14	368347250	CONNECTING ROD	1	
15	040006203	BEARING 6203	1	
16	080100520	STOP RING R- 52	1	
17	080200200	STOP RING S- 20	1	
19	047940060	NEEDLE BEARING FJ- 1816	1	
20	050710100	O- RING AS568- 267	1	
21	001520825	SOCKET HEAD BOLT 8X25 T	8	
23	366346210	CLUTCH ASSY	1	S/N S-1880 AND BELOW
23	366348550	CLUTCH ASSY	1	S/N S-1881 AND ABOVE
24	952401450	WASHER 8.5X22X3	1	
25-1	001220825	BOLT 8X25 T	1	
25-2	030208200	WASHER, LOCK M8	1	
26	368217640	ENGINE FLANGE	1	
28	001710840	SOCKET HEAD BOLT 8X40 T	4	
29	022611010	FLANGE NUT M10 H	4	
31	368347490	SHOCK ABSORBER BRACKET 60	1	
32-1	001211030	BOLT 10X30 H	4	
32-2	030210250	WASHER, LOCK M10	4	
33	939010270	STOPPER RUBBER (70)	1	
34	030208200	WASHER, LOCK M8	1	
35	020308060	NUT M8	1	
36	366118640	AIR CLEANER ASSY	1	INCLUDES ITEMS W/#
36-1#	366010010	AIR CLEANER COVER	1	
36-2#	366010020	WASHER, FLAT M6 (6.5X18X1.5)	2	
36-3#	030206150	WASHER, LOCK M6	2	
36-4#	366010040	COIN BOLT M6	2	
36-5#	366010050	AIR CLEANER BASE CP	1	
36-7#	366010070	PRIMARY ELEMENT CP	1	
36-8#	366010080	SECONDARY ELEMENT	1	
36-9#	366030040	GRIP BPLT CP	1	
37	366345470	INTAKE PIPE	1	
38	954407681	CYCLONE CLAMP (CY- 1) 45	1	
39	954407682	CYCLONE CLAMP (CY- 1) 38	1	
40	366460160	UNDER SEALING FORM	1	

CRANKCASE AND ENGINE ASSY. (CONT'D.)

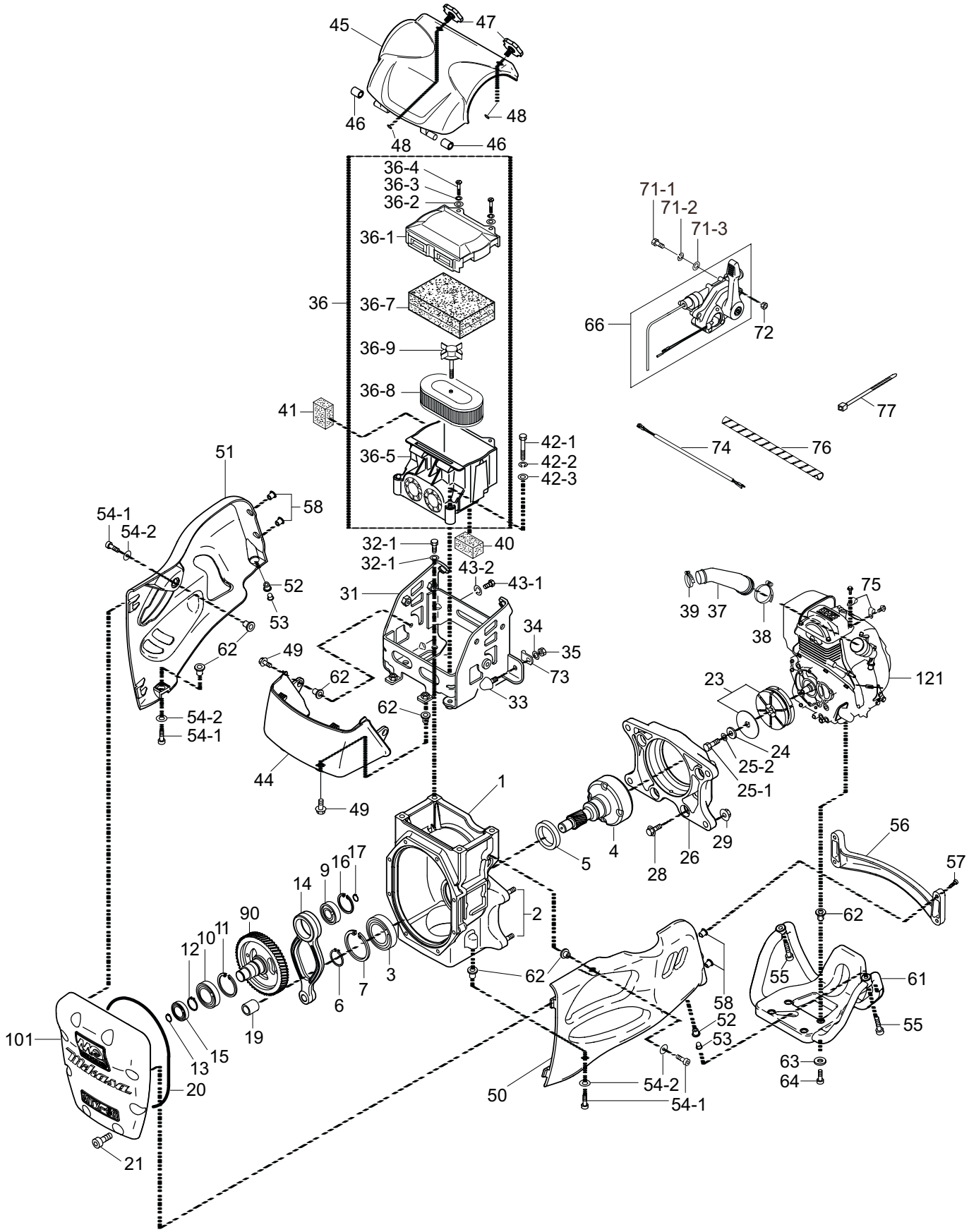

CRANKCASE AND ENGINE ASSY. (CONT'D.)

NO.	PART NO.	PART NAME	QTY.	REMARKS
41	366460150	SIDE SEALING FORM	1	
42-1	001220851	BOLT 8X55 T	2	
42-2	030208200	WASHER, LOCK M8	2	
42-3	031108160	WASHER, FLAT M8	2	
43-1	001210815	BOLT 8X15 H	2	
43-2	030208200	WASHER, LOCK M8	2	
44	368217760	BOTTOM CLEANER COVER 60	1	
45	368217750	TOP CLEANER COVER 60	1	
46	366460140	RUBBER BUSH 10X16X17	2	
47	366345980	CLEANER COVER KNOB	2	
48	050200060	O- RING P6	2	
49	009110040	FLANGE BOLT 8X20	4	
50	368119470	LINK GUARD	1	
51	368119480	MUFFLER GUARD	1	
52	022910260	WELL NUT M8	2	
53	366460170	FLANGE COLLAR 8	2	
54-1	001520820	SOCKET HEAD BOLT 8X20 T	4	
54-2	031108160	WASHER, FLAT M8	4	
55	009110038	SOCKET HEAD BOLT 8X30 ZN	2	
56	368217770	EX BAR	1	
57	009110039	SOCKET HEAD BOLT 6X25 ZN	4	
58	022910250	WELL NUT M6	4	
61	368119490	ENGINE GUARD	1	
62	366461050	COLLAR / GUARD	12	
63	033910220	WASHER 8.4X15.5X1.6	4	
64	009110038	SOCKET HEAD BOLT 8X30 ZN	4	
66	366900032	LEVER ASSY W/ T. WIRE	1	INCLUDES ITEMS W/@
71-1	001220620	BOLT 6X20 T	2	
71-2	030206150	WASHER, LOCK M6	2	
71-3	031106100	WASHER, FLAT M6	2	
72	020306050	NUT M6	2	
73	959006120	CLIP (TCP2 - 10509B)	1	
74	368461280	WIRE HARNESS	1	
75	2067550101	CLAMP COMPL	2	
76	959021810	SPIRAL TUBE KEP6 / L=500	1	
77	454010020	CLAMP TC- 100	3	
90	368347270	CRANK GEAR	1	
101	368010010	FRONT COVER	1	
121	912210012	ENGINE ASSY, GX100UKRBF	1	
122@	956100062	THROTTLE WIRE	1	

GUIDE CYLINDER ASSY.

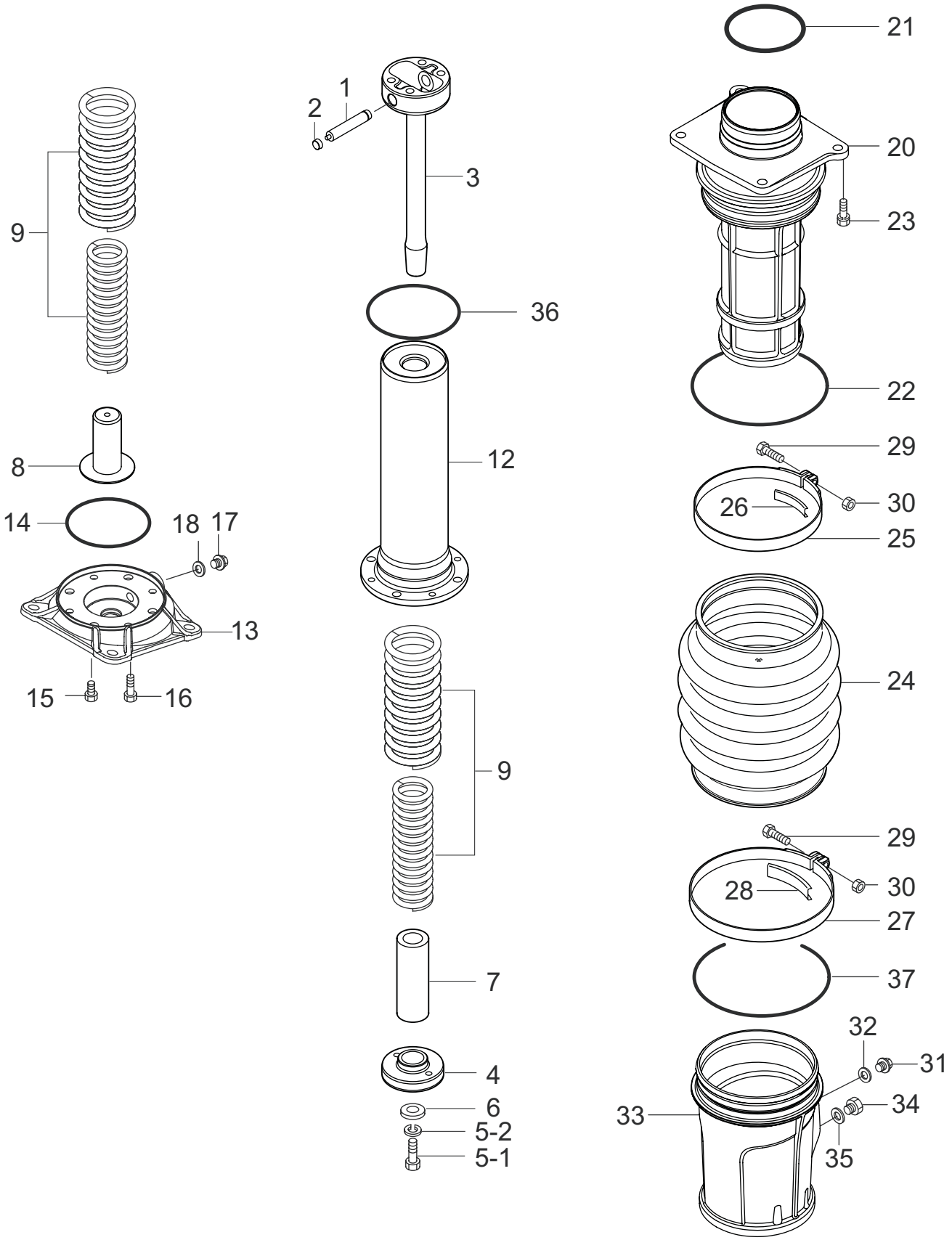

GUIDE CYLINDER ASSY.

NO.	PART NO.	PART NAME	QTY.	REMARKS
1	368461210	PISTON PIN	1	
2	368459920	PISTON PIN PLUG	2	
3	368347290	PISTON ROD	1	
4	368461160	PISTON END	1	
5-1	001121230	BOLT 12X30 T	1	
5-2	030212300	WASHER, LOCK M12	1	
6	952404790	WASHER 13306	1	
7	368461260	LOWER STOPPER	1	
8	368461200	BOTTOM STOPPER	1	
9	368461270	MAIN SPRING	2	
12	368347281	SPRING CYLINDER	1	REPLACES P/N 368347280
13	368217710	FOOT PLATE	1	
14	050100800	O- RING G- 80	1	
15	001521020	SOCKET HEAD BOLT 15X20 T	4	
16	001520835	SOCKET HEAD BOLT 8X25 T	4	
17	953405270	PLUG 1/4X14 13L	1	
18	953405260	PACKING 1/4 (CU)	1	
20	368217720	CYLINDER GUIDE	1	
21	050100850	O- RING G-85	1	
22	050101150	O- RING G-115	1	
23	002211035	BOLT 10X35 H, SW4	4	
24	368346180	ORANGE BELLOWS	1	
25	368347520	BELLOWS CLAMP 131D	1	
26	368461400	BAND GUIDE 131D	1	
27	368347530	BELLOWS CLAMP 149D	1	
28	368461410	BAND GUIDE 149D	1	
29	001220840	BOLT 8X40 T	2	
30	020308060	NUT M8	2	
31	953405270	PLUG 1/4X14 13L	1	
32	953405260	PACKING 1/4 (CU)	1	
33	368118970	PROTECTION SLEEVE	1	
34	366460300	OIL GAUGE ASSY	1	
35	953404670	COPPER PACKING 17X25.5X1	1	
36	050200800	O- RING P- 80	1	
37	050101300	O- RING G-130	1	

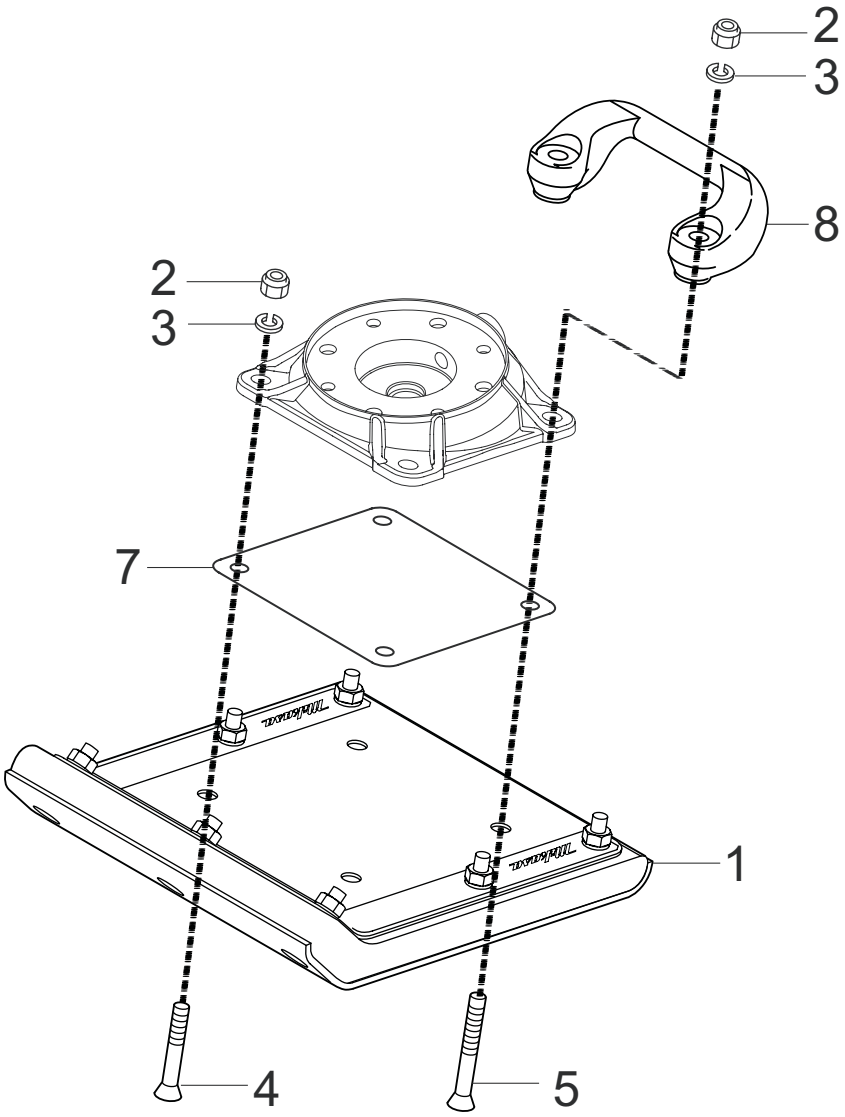
2
3
8
2
3
7
1
4
5

FOOT ASSY.

NO.	PART NO.	PART NAME	QTY.	REMARKS
1	362910150	FOOT ASSY 265W M4B	1	
2	022711214	NYLON NUT M12	4	
3	030212300	WASHER, LOCK M12	4	
4	009110034	SQUARE NECK BOLT 12X65	2	
5	009110035	SQUARE NECK BOLT 12X95	2	
7	368347460	FOOT COVER	1	
8	363343390	HANDLEBAR GRIP (FOOT)	1	

FUEL TANK AND HANDLE ASSY.

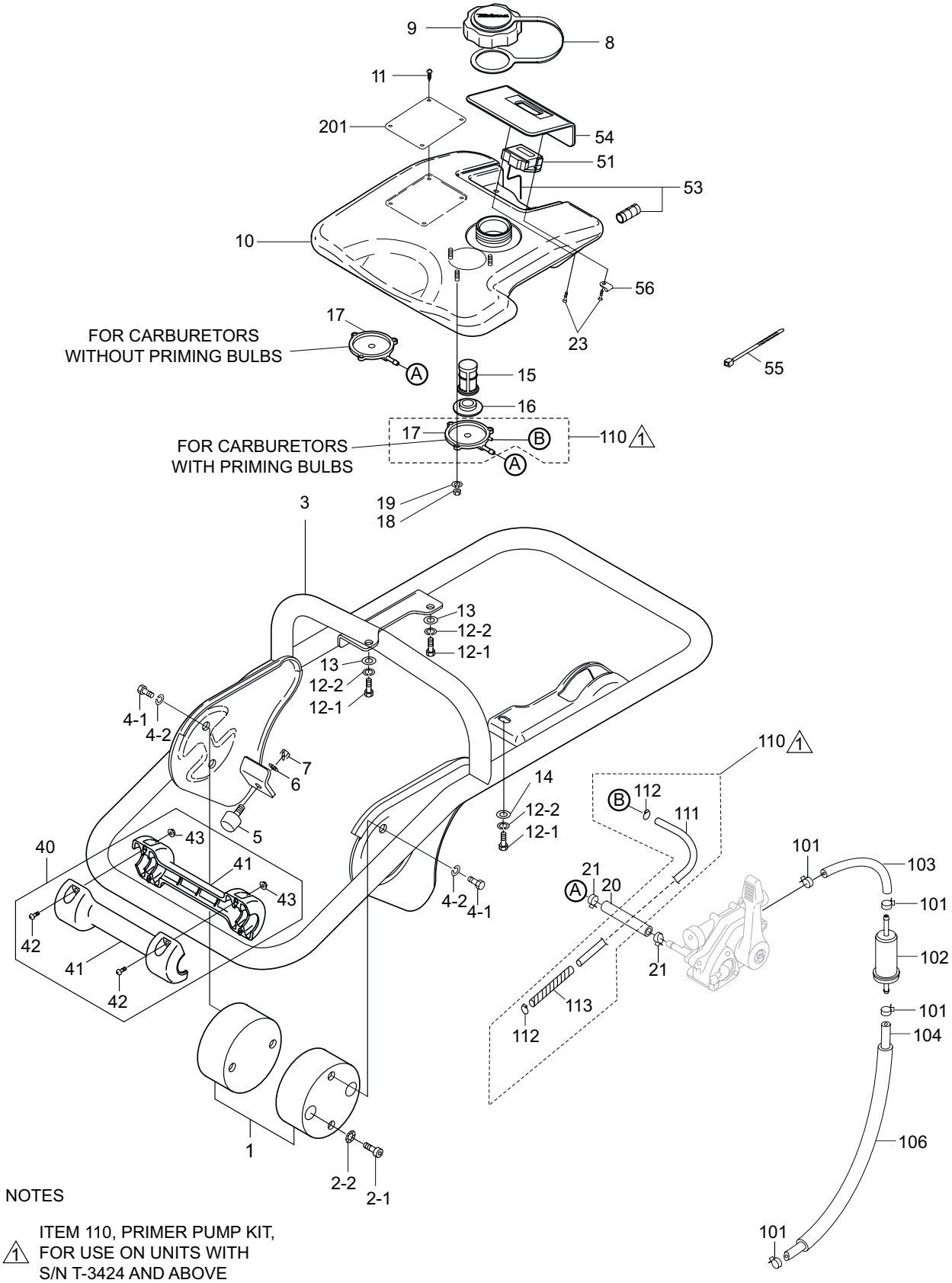

NOTES

1 ITEM 110, PRIMER PUMP KIT, FOR USE ON UNITS WITH S/N T-3424 AND ABOVE

FUEL TANK AND HANDLE ASSY.

NO.	PART NO.	PART NAME	QTY.	REMARKS
1	368347630	SHOCK ABSORBER W/ PIN	2	
2-1	001521020	SOCKET HEAD BOLT 10X20 T	4	
2-2	033121009	TOOTHED LOCK WASHER B M10	4	
3	368119570	HANDLE	1	
4-1	001211020	BOLT 10X20 H	4	
4-2	030210250	WASHER, LOCK M10	4	
5	939010270	RUBBER STOPPER (70)	1	
6	030208200	WASHER, LOCK M8	1	
7	020308060	NUT M8	1	
8@	366010060	TANK CAP STRAP	1	
9	366345570	FUEL TANK CAP ASSY	1	INCLUDES ITEM W/ @
10	368119460	FUEL TANK 2L	1	
11	094010053	PAN HEAD SCREW 4X8	4	
12-1	001210815	BOLT 8X15 H	3	
12-2	030208200	WASHER, LOCK M8	3	
13	952401450	WASHER 8.5X22X3	2	
14	031108160	WASHER, FLAT M8	1	
15	959300770	STRAINER #508	1	
16	366459790	FUEL TANK PACKING	1	
17	366345280	FILTER HOLDER	1	S/N T-3423 AND BELOW
17%	366349420	FILTER HOLDER W/V	1	S/N T-3424 AND ABOVE
18	020305040	NUT M5	3	
19	030205130	WASHER, LOCK M5	3	
20	959026122	FUEL HOSE L=70	1	
21	954406420	HOSE BAND 10.5	2	
23	009110037	TAPPING SCREW 5X20	2	
40	366910030	ROLLER ASSY W/ SCREW	1	INCLUDES ITEM W/ #
41#	366217170	ROLLER	2	
42#	091005020	SCREW 5X20	4	
43#	022610505	FLANGE NUT M5 H	4	
51	980010330	TACHO & HOUR METER	1	
53	955010305	CURL CORD TP-22	1	
54	366345620	METER FINISHER	1	
55	454010020	CLAMP TC-100	5	
56	954010270	CLIP AB-3N	1	
101	954406420	HOSE BAND 10.5	4	
102	16910Z4ES21	FUEL STRAINER	1	
103	959026103	FUEL HOSE 5.5X11.5X80	1	
104	950014500150M	FUEL HOSE 1M	1	
106	950033606020	VINYL TUBE L260	1	
110	366900060	PRIMER PUMP KIT/ NO CARB	1	INCLUDES ITEMS W/% S/N T-3424 AND ABOVE
111%	959028301	RETURN HOSE 3X6X600	1	S/N T-3424 AND ABOVE
112%	954408170	HOSE CLIP 5	2	S/N T-3424 AND ABOVE
113%	959021814	SPIRAL TUBE 6D-200L	1	S/N T-3424 AND ABOVE
201	920212910	OPERATION DECAL	1	

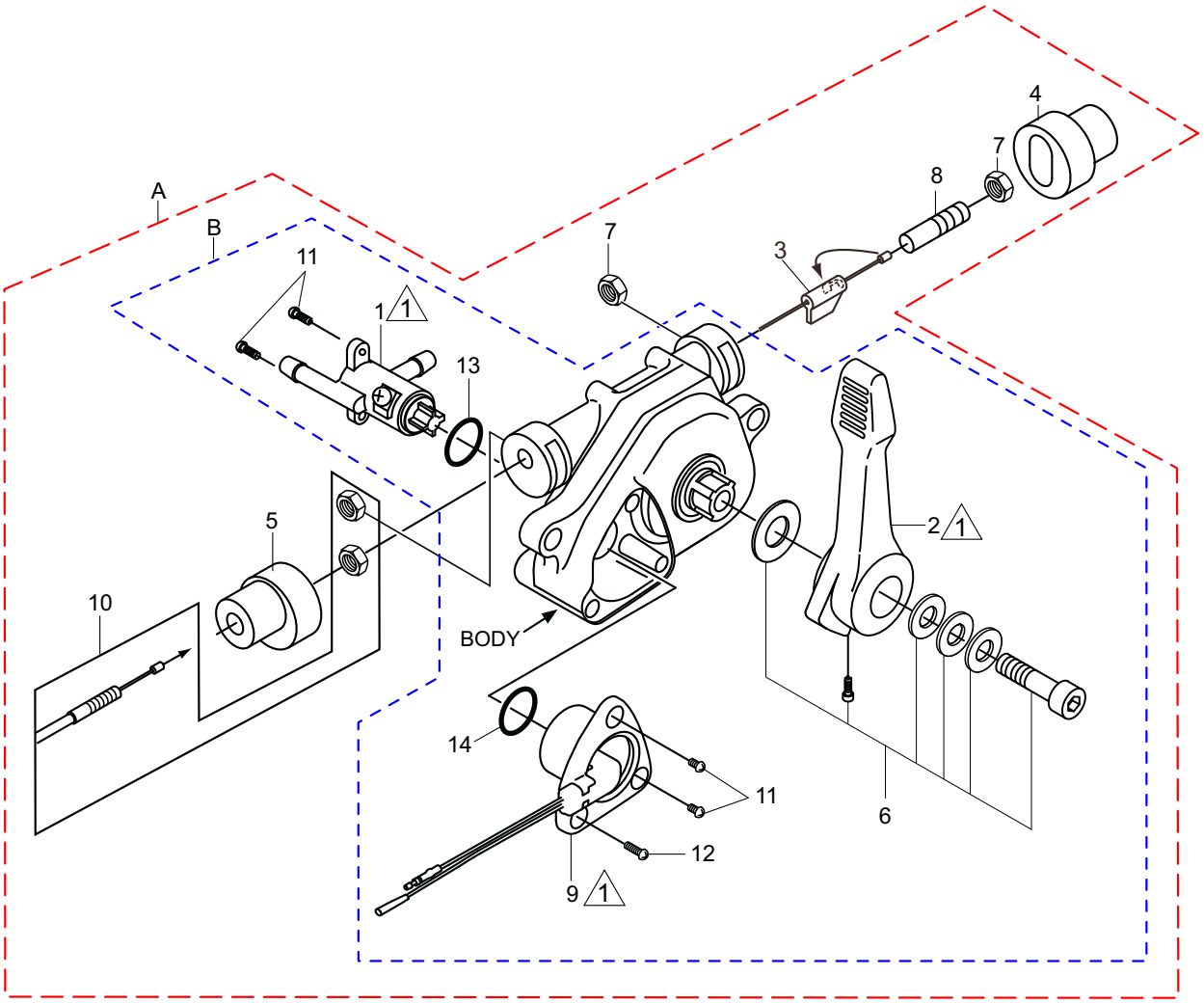

DETAIL C

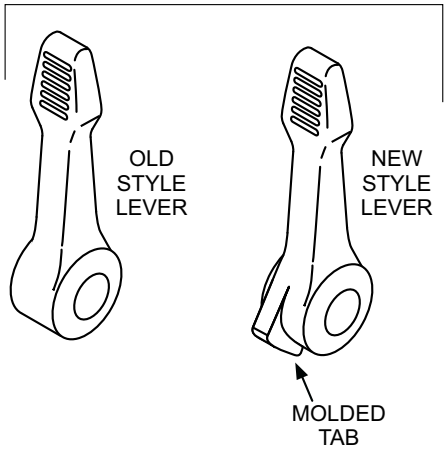

NOTES:

1 ITEMS 1, 2 AND 9 ARE NO LONGER AVAILABLE (NLA) FOR OLD STYLE LEVER, ***MUST*** ORDER ITEM A OR B. TO DETERMINE WHAT TYPE LEVER, REFERENCE **DETAIL C**, NEW STYLE LEVER HAS MOLDED TAB AT BOTTOM.

COMBINATION LEVER ASSY.

NO.	PART NO.	PART NAME	QTY.	REMARKS
A	366900032	COMB. LEVER W/ THROTTLE WIRE	1	INCLUDES ITEMS W/@
B	956200110	COMB. LEVER W/OUT THROTTLE WIRE	1	INCLUDES ITEMS W/ #
1@#	366346260	FUEL COCK, OLD STYLE	1	NLA, MUST ORDER ITEM A OR B
1@#	366349430	FUEL COCK, NEW STYLE	1	
2@#	366010180	LEVER, OLD STYLE	1	NLA, MUST ORDER ITEM A OR B
2@#	366010310	LEVER, NEW STYLE (MOLDED TAB)	1	
3@	366010190	SLIDER	1	
4@	366010200	END CAP	1	
5@	366010210	WIRE CAP	1	
6@#	366010220	BOLT AND WASHER SET	1	
7@	020408050	NUT M8, H=5	2	
8@	959407650	SOCKET HEAD SCREW/TH.WIRE	1	
9@#	366010260	STOP SWITCH, OLD STYLE	1	NLA, MUST ORDER ITEM A OR B
9@#	366010320	STOP SWITCH, NEW STYLE	1	
10@	956100062	THROTTLE WIRE	11	
11@#	094010051	TAPPING SCREW B1 4X12	4	
12@#	094010052	TAPPING SCREW B1 4X30	1	
13@#	050200150	O-RING, P15	1	
14@#	050200110	O-RING, P11	1	

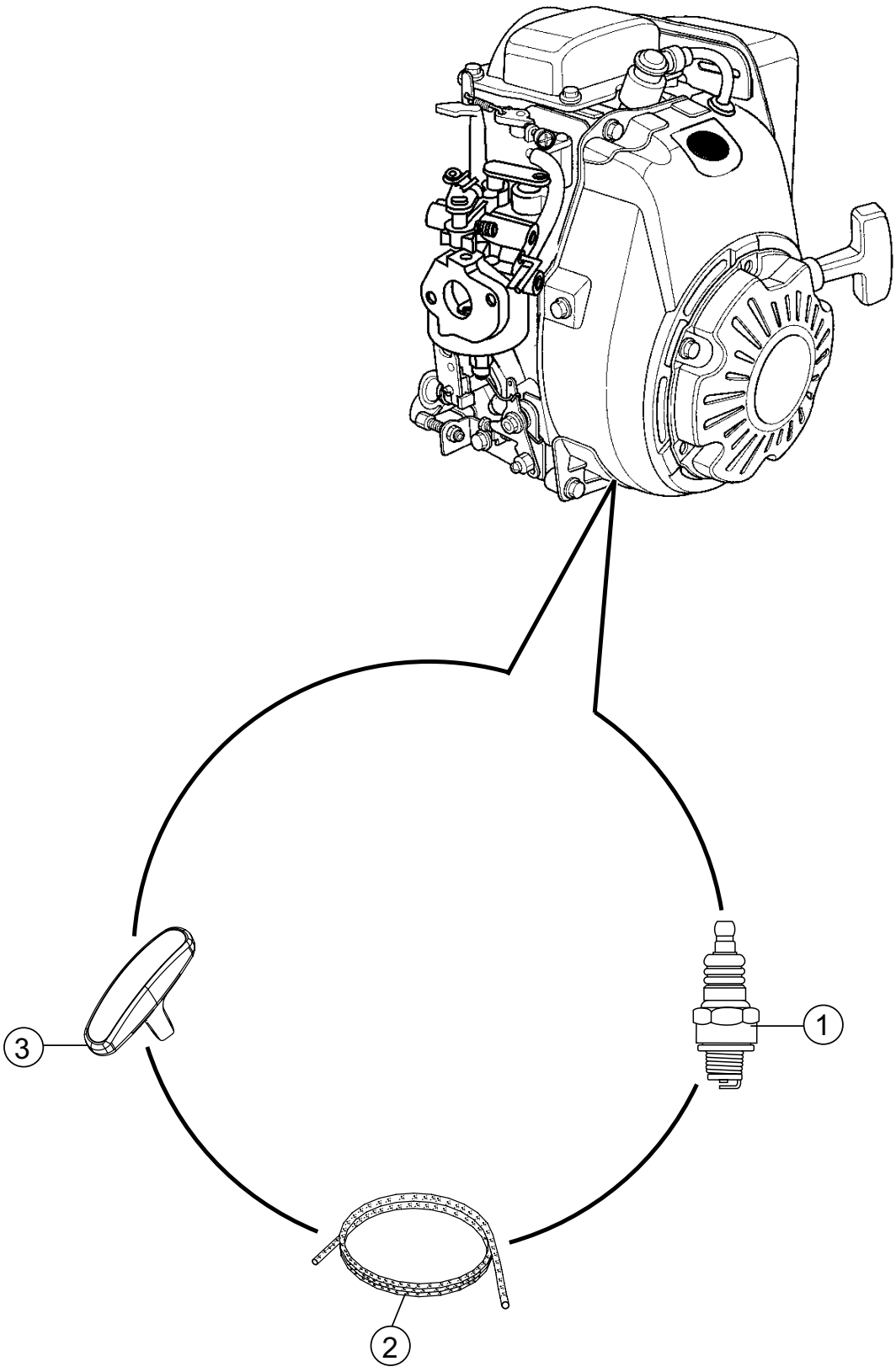
3
1
2

NO.	PART NO.	PART NAME	QTY.	REMARKS
1	9805655757	PLUG, SPARK (U16FSR-UB)	1	
2	28462Z0DV02	ROPE, RECOIL STARTER	1	
3	28461ZH8003	GRIP, RECOIL STARTER	1	

PARTS MANUAL

HERE'S HOW TO GET HELP

PLEASE HAVE THE MODEL AND SERIAL NUMBER ON-HAND WHEN CALLING

UNITED STATES

Multiquip Inc.

(310) 537- 3700
6141 Katella Avenue Suite 200
Cypress, CA 90630
E-MAIL: mq@multiquip.com
WEBSITE: www.multiquip.com

CANADA

Multiquip

(450) 625-2244
4110 Industriel Boul.
Laval, Quebec, Canada H7L 6V3
E-MAIL: infocanada@multiquip.com

UNITED KINGDOM

Multiquip (UK) Limited Head Office

0161 339 2223
Unit 2, Northpoint Industrial Estate,
Globe Lane,
Dukinfield, Cheshire SK16 4UJ
E-MAIL: sales@multiquip.co.uk

© COPYRIGHT 2021, MULTIQUIP INC.

Multiquip Inc, the MQ logo and the Mikasa logo are registered trademarks of Multiquip Inc. and may not be used, reproduced, or altered without written permission. All other trademarks are the property of their respective owners and used with permission.

This manual MUST accompany the equipment at all times. This manual is considered a permanent part of the equipment and should remain with the unit if resold.

The information and specifications included in this publication were in effect at the time of approval for printing. Illustrations, descriptions, references and technical data contained in this manual are for guidance only and may not be considered as binding. Multiquip Inc. reserves the right to discontinue or change specifications, design or the information published in this publication at any time without notice and without incurring any obligations.

Your Local Dealer is:

MULTIQUIP®