# PARTS MANUAL

MULTIQUIP®

Mikasa SERIES

# MODEL MTX60SD

## TAMPING RAMMER

### (ROBIN ER120D45000 GASOLINE ENGINE)

Revision #5 (11/03/21)

To find the latest revision of this publication or associated operation manual, visit our website at: www.multiquip.com

**THIS MANUAL MUST ACCOMPANY THE EQUIPMENT AT ALL TIMES.**

# MTX60SD Rammer

Explanation Of Code In Remarks Column..... 4
Suggested Spare Parts ..... 5

## Rammer Component Drawings

Nameplate And Decals..... 6–7
Crankcase And Engine Assembly ..... 8–11
Guide Cylinder Assembly ..... 12–13
Foot Assembly..... 14–15
Fuel Tank And Handle Assembly..... 16–17
Combination Lever Assembly ..... 18–19
Tools ..... 20–21

## Robin ER120D45000 Engine Component Drawings

Crankcase Assembly..... 22–23
Crankshaft And Piston Assembly ..... 24–25
Intake And Exhaust Assembly..... 26–27
Governor And Operation Assembly..... 28–29
Cooling Assembly..... 30–31
Starting Assembly ..... 32–33
Carburetor Assembly..... 34–35
Electric Device Assembly ..... 36–37

***NOTICE***

Specifications and part numbers are subject to change without notice.

# NOTES

# EXPLANATION OF CODE IN REMARKS COLUMN

The following section explains the different symbols and remarks used in the Parts section of this manual. Use the help numbers found on the back page of the manual if there are any questions.

> ***NOTICE***
>
> The contents and part numbers listed in the parts section are subject to change **without notice**. Multiquip does not guarantee the availability of the parts listed.

## SAMPLE PARTS LIST

| NO. | PART NO. | PART NAME | QTY. | REMARKS |
|---|---|---|---|---|
| 1 | 12345 | BOLT | 1 | INCLUDES ITEMS W/% |
| 2% | | WASHER, 1/4 IN. | | NOT SOLD SEPARATELY |
| 2% | 12347 | WASHER, 3/8 IN. | 1 | MQ-45T ONLY |
| 3 | 12348 | HOSE | A/R | MAKE LOCALLY |
| 4 | 12349 | BEARING | 1 | S/N 2345B AND ABOVE |

## NO. Column

**Unique Symbols** — All items with same unique symbol (@, #, +, %, or >) in the number column belong to the same assembly or kit, which is indicated by a note in the "Remarks" column.

**Duplicate Item Numbers** — Duplicate numbers indicate multiple part numbers, which are in effect for the same general item, such as different size saw blade guards in use or a part that has been updated on newer versions of the same machine.

> ***NOTICE***
>
> When ordering a part that has more than one item number listed, check the remarks column for help in determining the proper part to order.

## PART NO. Column

**Numbers Used** — Part numbers can be indicated by a number, a blank entry, or TBD.

TBD (To Be Determined) is generally used to show a part that has not been assigned a formal part number at the time of publication.

A blank entry generally indicates that the item is not sold separately or is not sold by Multiquip. Other entries will be clarified in the "Remarks" Column.

## QTY. Column

**Numbers Used** — Item quantity can be indicated by a number, a blank entry, or A/R.

A/R (As Required) is generally used for hoses or other parts that are sold in bulk and cut to length.

A blank entry generally indicates that the item is not sold separately. Other entries will be clarified in the "Remarks" Column.

## REMARKS Column

Some of the most common notes found in the "Remarks" Column are listed below. Other additional notes needed to describe the item can also be shown.

**Assembly/Kit** — All items on the parts list with the same unique symbol will be included when this item is purchased.

Indicated by:

"INCLUDES ITEMS W/(unique symbol)"

**Serial Number Break** — Used to list an effective serial number range where a particular part is used.

Indicated by:

"S/N XXXXX AND BELOW"
"S/N XXXX AND ABOVE"
"S/N XXXX TO S/N XXX"

**Specific Model Number Use** — Indicates that the part is used only with the specific model number or model number variant listed. It can also be used to show a part is NOT used on a specific model or model number variant.

Indicated by:

"XXXXX ONLY"
"NOT USED ON XXXX"

**"Make/Obtain Locally"** — Indicates that the part can be purchased at any hardware shop or made out of available items. Examples include battery cables, shims, and certain washers and nuts.

**"Not Sold Separately"** — Indicates that an item cannot be purchased as a separate item and is either part of an assembly/kit that can be purchased, or is not available for sale through Multiquip.

## MTX60SD TAMPING RAMMER WITH ROBIN ER120D45000 ENGINE

### 1 to 3 units

| Qty. | P/N | Description |
|---|---|---|
| 1 | 956100062 | THROTTLE WIRE |
| 3 | 366010070 | PRIMARY ELEMENT, AIR CLEANER |
| 3 | 366010080 | SECONDARY ELEMENT, AIR CLEANER |
| 1 | 366350460 | CAP, FUEL TANK WITH STRAP |
| 2 | 26365012A3 | FILTER, IN-LINE FUEL |
| 3 | 0650140860 | SPARK PLUG |
| 1 | 954406010 | STRAINER, #110 FUEL TANK |
| 1 | 21E5011008 | ROPE, RECOIL STARTER |
| 1 | 956200110 | COMBINATION LEVER |
| 1 | 366900170 | CUP AND PACKING SET |
| 1 | 366348550 | CLUTCH ASSY. |

***NOTICE***

Part numbers on this Suggested Spare Parts list may supersede/replace the part numbers shown in the following parts lists.

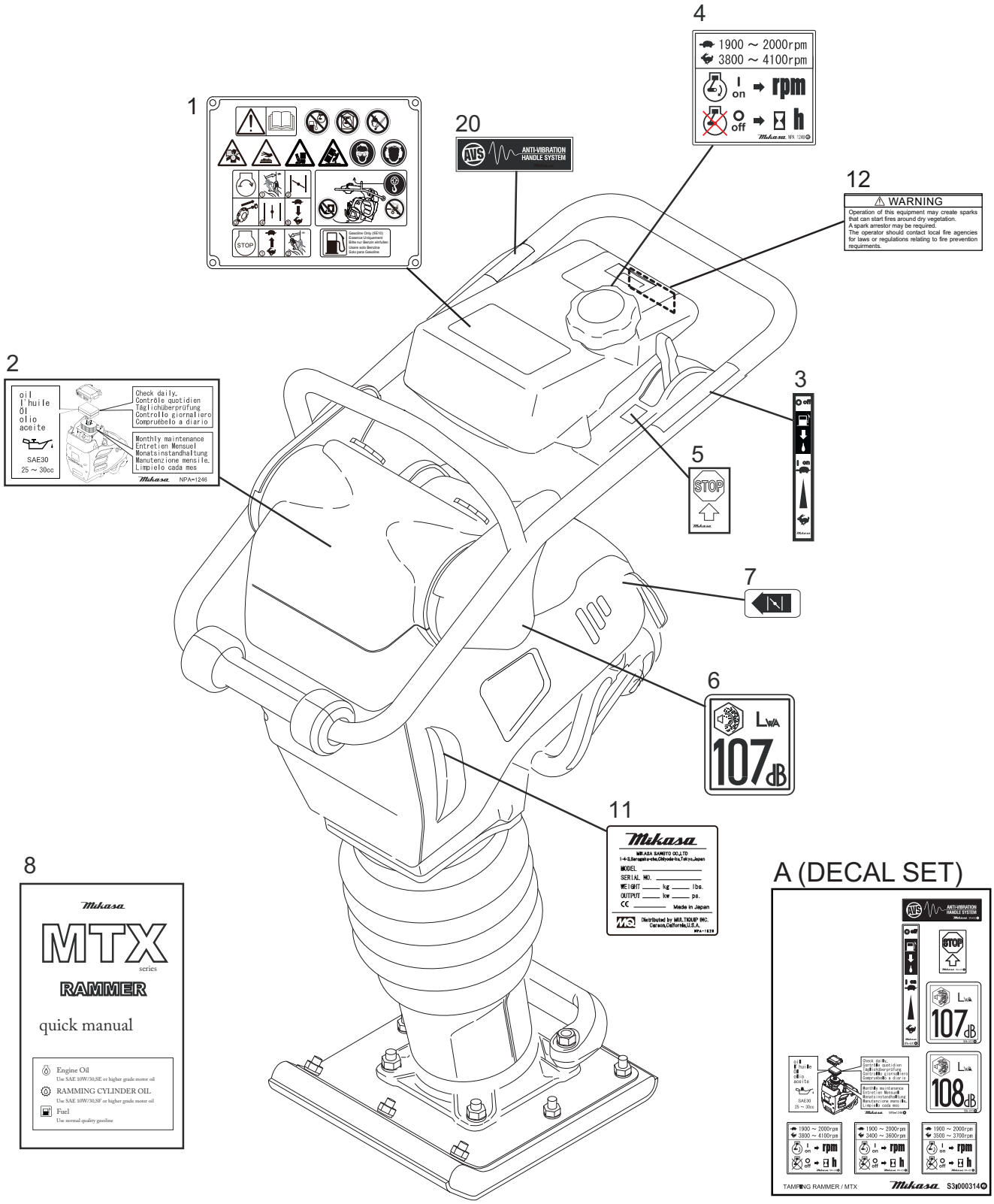
1
20
4
1900 ~ 2000rpm
3800 ~ 4100rpm
rpm
12
WARNING
Operation of this equipment may create sparks that can start fires around dry vegetation.
A spark arrestor may be required.
The operator should contact local fire agencies for laws or regulations relating to fire prevention requirments.
2
oil
l'huile
Öl
olio
aceite
SAE30
25 ~ 30cc
Check daily.
Contrôle quotidien
Täglichüberprüfung
Controllo giornaliero
Compruébelo a diario
Monthly maintenance
Entretien Mensuel
Monatsinstandhaltung
Manutenzione mensile.
Limpielo cada mes
NPA-1246
3
5
STOP
7
6
LWA
107dB
11
Mikasa
MIKASA SANGYO CO.,LTD
MODEL
SERIAL NO.
WEIGHT kg lbs.
OUTPUT kw ps.
Made in Japan
8
Mikasa
MTX
series
RAMMER
quick manual
Engine Oil
Use SAE 10W/30,SE or higher grade motor oil
RAMMING CYLINDER OIL
Use SAE 10W/30,SF or higher grade motor oil
Fuel
Use normal quality gasoline
A (DECAL SET)
ANTI-VIBRATION HANDLE SYSTEM
STOP
LWA
107dB
LWA
108dB
1900 ~ 2000rpm
3800 ~ 4100rpm
1900 ~ 2000rpm
3400 ~ 3600rpm
1900 ~ 2000rpm
3500 ~ 3700rpm
rpm
TAMPING RAMMER / MTX
Mikasa
S3t000314

| NO. | PART NO. | PART NAME | QTY. | REMARKS |
|---|---|---|---|---|
| A | 920900040 | DECAL, SET | 1 | INCLUDES ITEMS W/# |
| 1 | 920215440 | OPERATION DECAL | 1 | |
| 2# | | AIR CLEANER DECAL | 1 | NPA-1246 |
| 3# | | LEVER OPERATION DECAL | 1 | |
| 4# | | MAX SPEED DECAL 4100 | 1 | |
| 5# | | MACHINE STOP DECAL | 1 | |
| 6# | | EC NOISE REQ. DECAL LWA107 | 1 | |
| 7 | 920212840 | CHOKE OPERATION DECAL | 1 | |
| 8 | 920212540 | QUICK MANUAL | 1 | |
| 11 | | SERIAL PLATE NO. | 1 | CONTACT MQ PARTS DEPT |
| 12 | 920214100 | E/G FIRE WARNING. DECAL | 1 | |
| 20# | | ANTI-VIB. HANDLE DECAL | 1 | |

# CRANKCASE AND ENGINE ASSY.

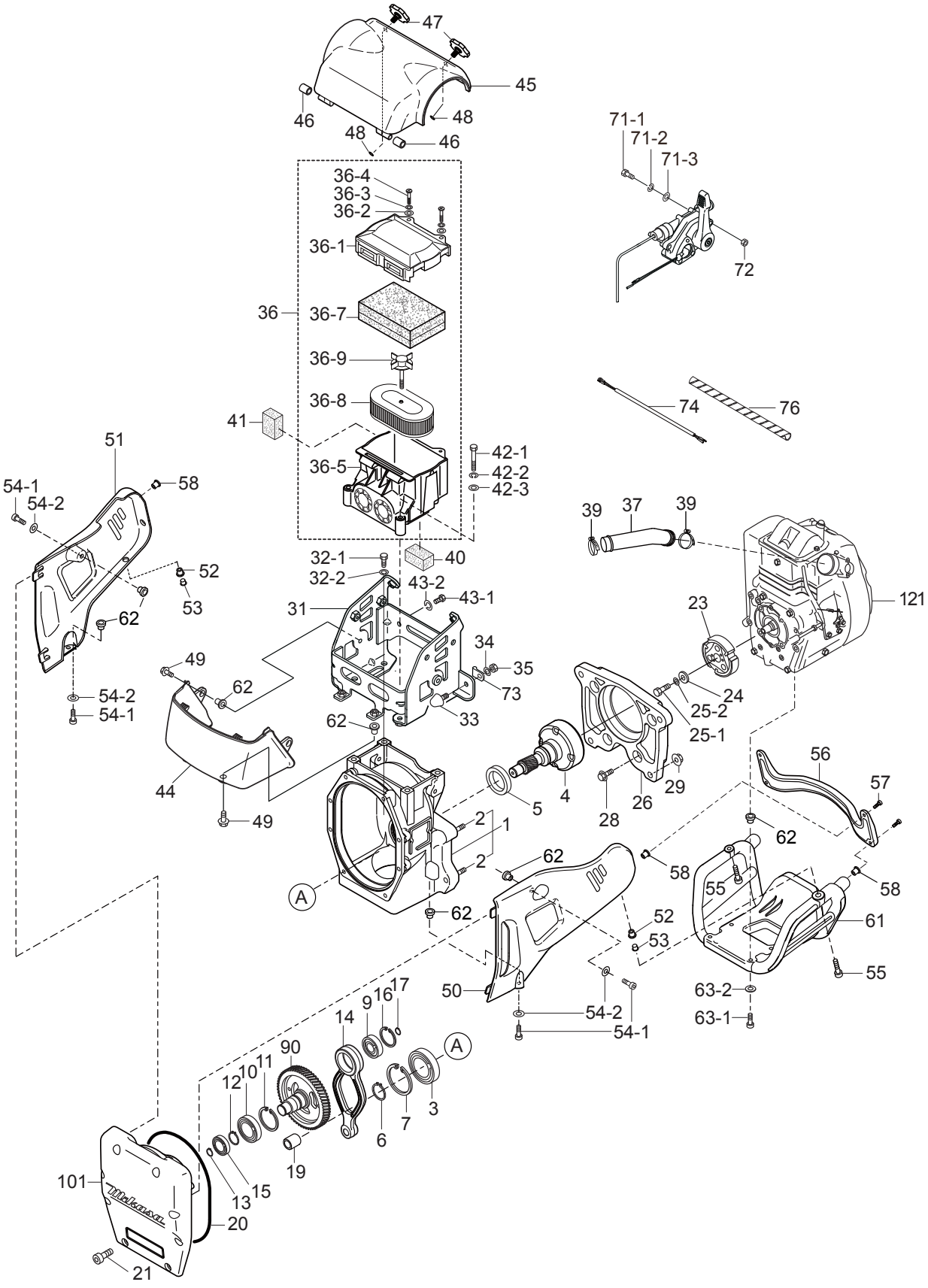

| NO. | PART NO. | PART NAME | QTY. | REMARKS |
|---|---|---|---|---|
| 1 | 368119170 | CRANKCASE CP. | 1 | INCLUDES ITEM W/ * |
| 2* | 009120204 | STUD BOLT 10X50X21T/21S | 4 | |
| 3 | 041006007 | BEARING 6007Z | 1 | |
| 4 | 368347410 | PINION DRUM | 1 | |
| 5 | 060404010 | OIL SEAL TC - 40528 | 1 | |
| 6 | 080200350 | STOP RING S-35 | 1 | |
| 7 | 080100620 | STOP RING R-62 | 1 | |
| 9 | 040006304 | BEARING 6304 | 1 | |
| 10 | 040006305 | BEARING 6305 | 1 | |
| 11 | 080100620 | STOP RING R62 | 1 | |
| 12 | 080200170 | STOP RING S-17 | 1 | |
| 13 | JISB2804C25 | STOP RING S-25 | 1 | REPLACES P/N 080200250 |
| 14 | 368347250 | CONNECTING ROD | 1 | |
| 15 | 042506203 | BEARING 6203 | 1 | REPLACES P/N 040006203 |
| 16 | 080100520 | STOP RING R- 52 | 1 | |
| 17 | 080200200 | STOP RING S- 20 | 1 | |
| 19 | 047940060 | NEEDLE BEARING FJ-1816 | 1 | |
| 20 | 050710100 | O-RING AS568- 262 | 1 | |
| 21 | 009110025 | SOCKET HEAD BOLT 8X25 ZN | 8 | |
| 23 | 366348550 | CLUTCH ASSY. | 1 | |
| 24 | 952401450 | WASHER 8.5X22X3 | 1 | |
| 25-1 | 001220825 | BOLT 8X25 T | 1 | |
| 25-2 | 030208200 | WASHER, LOCK M8 | 1 | |
| 26 | 368217640 | ENGINE FLANGE | 1 | |
| 28 | 001710840 | FLANGE BOLT 8X40 T | 4 | |
| 29 | 022611010 | FLANGE NUT M10 H | 4 | |
| 31 | 368347490 | SHOCK ABSORBER BRACKET 60 | 1 | |
| 32-1 | 001221030 | BOLT 10X30 H | 4 | |
| 32-2 | 030210250 | WASHER, LOCK M10 | 4 | |
| 33 | 939010270 | STOPPER RUBBER (70) | 1 | |
| 34 | 030208200 | WASHER, LOCK M8 | 1 | |
| 35 | 020308060 | NUT M8 | 1 | |
| 36 | 366118640 | AIR CLEANER ASSY. | 1 | INCLUDES ITEMS W/ # |
| 36-1# | 366010010 | AIR CLEANER COVER | 1 | |
| 36-2# | 366010020 | WASHER, FLAT M6 (6.5X18X1.5) | 2 | |
| 36-3# | 030206150 | WASHER, LOCK M6 | 2 | |
| 36-4# | 366010040 | COIN BOLT M6 | 2 | |
| 36-5# | 366010050 | AIR CLEANER BASE CP | 1 | |
| 36-7# | 366010070 | PRIMARY ELEMENT CP | 1 | |
| 36-8# | 366010080 | SECONDARY ELEMENT | 1 | |
| 36-9# | 362030040 | GRIP BPLT CP | 1 | |
| 37 | 366350540 | INTAKE PIPE | 1 | |
| 39 | 954407682 | CYCLONE CLAMP (CY-1) 38 | 2 | |
| 40 | 366460160 | UNDER SEALING FORM | 1 | |

# CRANKCASE AND ENGINE ASSY. (CONT'D.)

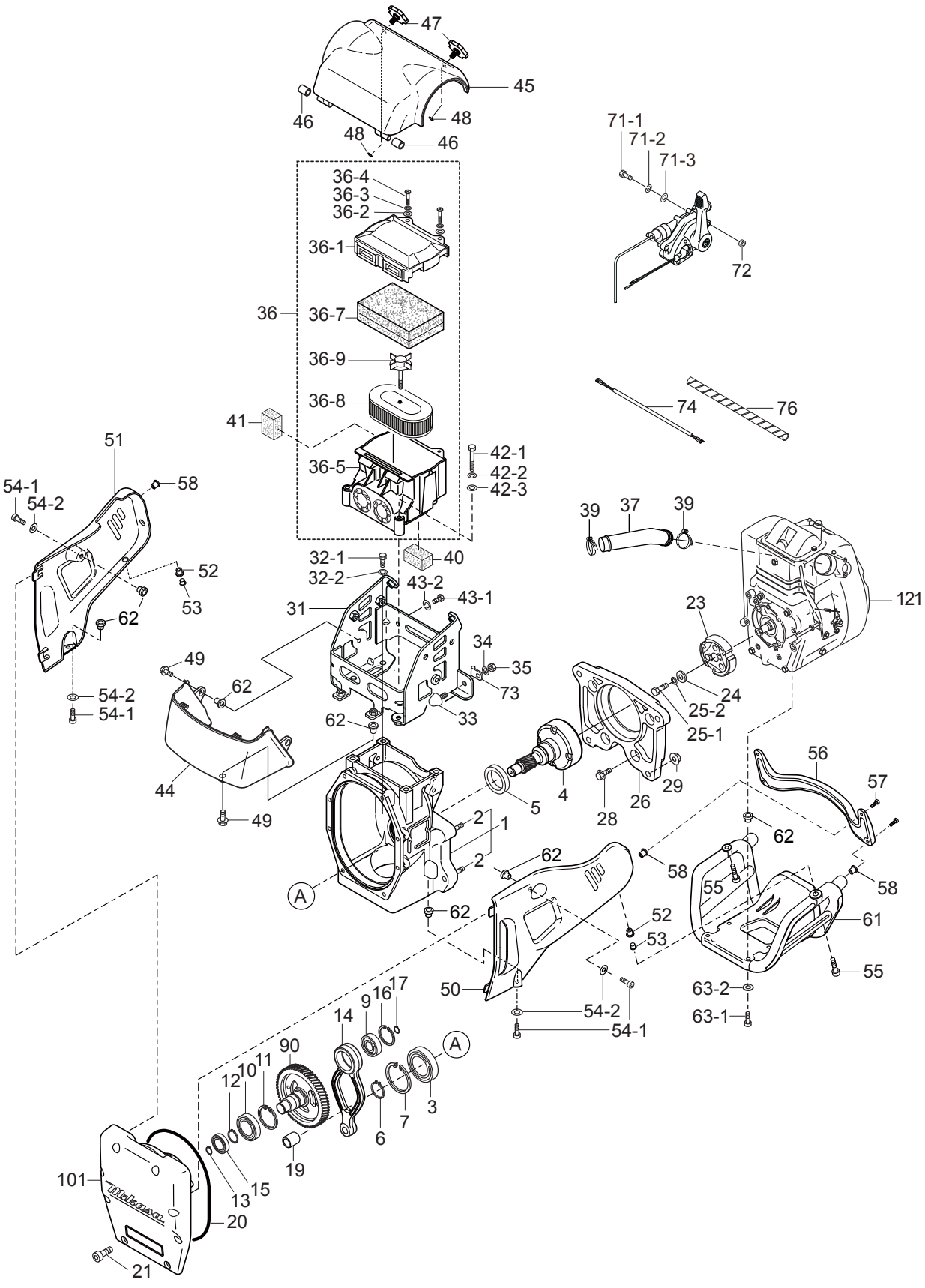

| NO. | PART NO. | PART NAME | QTY. | REMARKS |
|---|---|---|---|---|
| 41 | 366460150 | SIDE SEALING FORM | 1 | |
| 42-1 | 001220851 | BOLT 8X55 T | 2 | |
| 42-2 | 030208200 | WASHER, LOCK M8 | 2 | |
| 42-3 | 031108160 | WASHER, FLAT M8 | 2 | |
| 43-1 | 001210815 | BOLT 8X15 H | 2 | |
| 43-2 | 030208200 | WASHER, LOCK M8 | 2 | |
| 44 | 368217760 | BOTTOM CLEANER COVER 60 | 1 | |
| 45 | 368217750 | TOP CLEANER COVER 60 | 1 | |
| 46 | 366460140 | RUBBER BUSH 10X16X17 | 2 | |
| 47 | 366345980 | CLEANER COVER KNOB | 2 | |
| 48 | 050200060 | O-RING P6 | 2 | |
| 49 | 009110040 | FLANGE BOLT 8X20 | 4 | |
| 50 | 368120510 | LINK GUARD | 1 | |
| 51 | 368120520 | MUFFLER GUARD | 1 | |
| 52 | 022910260 | WELL NUT M8 | 2 | |
| 53 | 366460170 | FLANGE COLLAR 8 | 2 | |
| 54-1 | 009110024 | SOCKET HEAD BOLT 8X20 ZN | 4 | |
| 54-2 | 033910220 | WASHER 8.4X15.5X1.6 | 4 | |
| 55 | 009110038 | SOCKET HEAD BOLT 8X30 ZN | 2 | |
| 56 | 368217770 | EX BAR | 1 | |
| 57 | 009110039 | SOCKET HEAD BOLT 6X25 ZN | 4 | |
| 58 | 022910250 | WELL NUT M6 | 4 | |
| 61 | 366120430 | ENGINE GUARD | 1 | |
| 62 | 366461050 | COLLAR/GUARD | 12 | |
| 63-1 | 009110025 | SOCKET HEAD BOLT 8X25 ZN | 4 | |
| 63-2 | 033910220 | WASHER 8.4X15.5X1.6 | 4 | |
| 71-1 | 001220620 | BOLT 6X20T | 2 | |
| 71-2 | 030206150 | WASHER, LOCK M6 | 2 | |
| 71-3 | 031106100 | WASHER, FLAT M6 | 2 | |
| 72 | 020306050 | NUT M6 | 2 | |
| 73 | 959006120 | CLIP (TCP2 - 10509B) | 1 | |
| 74 | 367460120 | WIRE HARNESS | 1 | |
| 76 | 959021814 | SPIRAL TUBE KEP6/L=200 | 1 | |
| 90 | 368347270 | CRANK GEAR | 1 | |
| 101 | 368010010 | FRONT COVER | 1 | |
| 121 | 911231201 | ENGINE, ER120D45000 | 1 | |

# GUIDE CYLINDER ASSY.

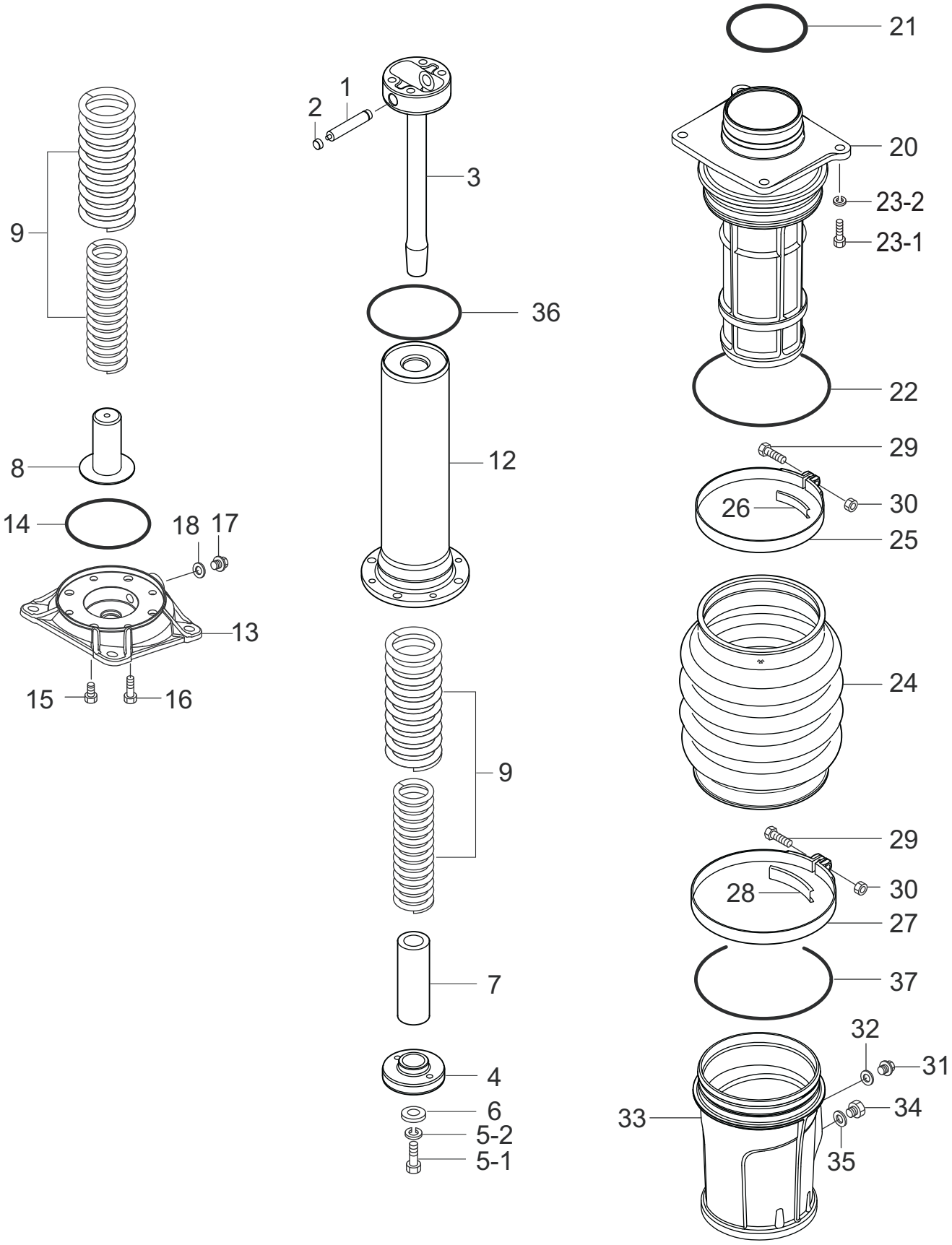

# GUIDE CYLINDER ASSY.

| NO. | PART NO. | PART NAME | QTY. | REMARKS |
|---|---|---|---|---|
| 1 | 368461210 | PISTON PIN | 1 | |
| 2 | 368459920 | PISTON PIN PLUG | 2 | |
| 3 | 368347290 | PISTON ROD | 1 | |
| 4 | 368461160 | PISTON END | 1 | |
| 5-1 | 001121230 | BOLT 12X30 T, P1.5 | 1 | |
| 5-2 | 030212300 | WASHER, LOCK M12 | 1 | |
| 6 | 952404790 | WASHER 13306 | 1 | |
| 7 | 368461260 | LOWER STOPPER | 1 | |
| 8 | 368461200 | BOTTOM STOPPER | 1 | |
| 9 | 368461270 | MAIN SPRING | 2 | |
| 12 | 368347281 | SPRING CYLINDER | 1 | REPLACES P/N 368347280 |
| 13 | 368217710 | FOOT PLATE | 1 | |
| 14 | 050100800 | O-RING G-80 | 1 | |
| 15 | 001521020 | SOCKET HEAD BOLT 10X20 T | 4 | |
| 16 | 001520835 | SOCKET HEAD BOLT 8X35 T | 4 | |
| 17 | 953405270 | PLUG 1/4X14 13L | 1 | |
| 18 | 953405260 | PACKING 1/4 (CU) | 1 | |
| 20 | 368217720 | CYLINDER GUIDE | 1 | |
| 21 | 050100850 | O-RING G-85 | 1 | |
| 22 | 050101150 | O- RING G-115 | 1 | |
| 23-1 | 001221035 | BOLT 10X35 H | 4 | |
| 23-2 | 030210250 | WASHER, LOCK M8 | 4 | |
| 24 | 368346180 | ORANGE BELLOWS | 1 | |
| 25 | 368347520 | BELLOWS CLAMP131D | 1 | |
| 26 | 368461400 | BAND GUIDE 131D | 1 | |
| 27 | 368347530 | BELLOWS CLAMP 149D | 1 | |
| 28 | 368461410 | BAND GUIDE 149D | 1 | |
| 29 | 001220840 | BOLT 8X40 T | 2 | |
| 30 | 020308060 | NUT M8 | 2 | |
| 31 | 953405270 | PLUG 1/4X14 13L | 1 | |
| 32 | 953405260 | PACKING 1/4 (CU) | 1 | |
| 33 | 368118970 | PROTECTION SLEEVE | 1 | |
| 34 | 366460300 | OIL GAUGE ASSY. | 1 | |
| 35 | 953404670 | COPPER PACKING 17X25.5X1 | 1 | |
| 36 | 050200800 | O-RING P-80 | 1 | |
| 37 | 050101300 | O-RING G-130 | 1 | |

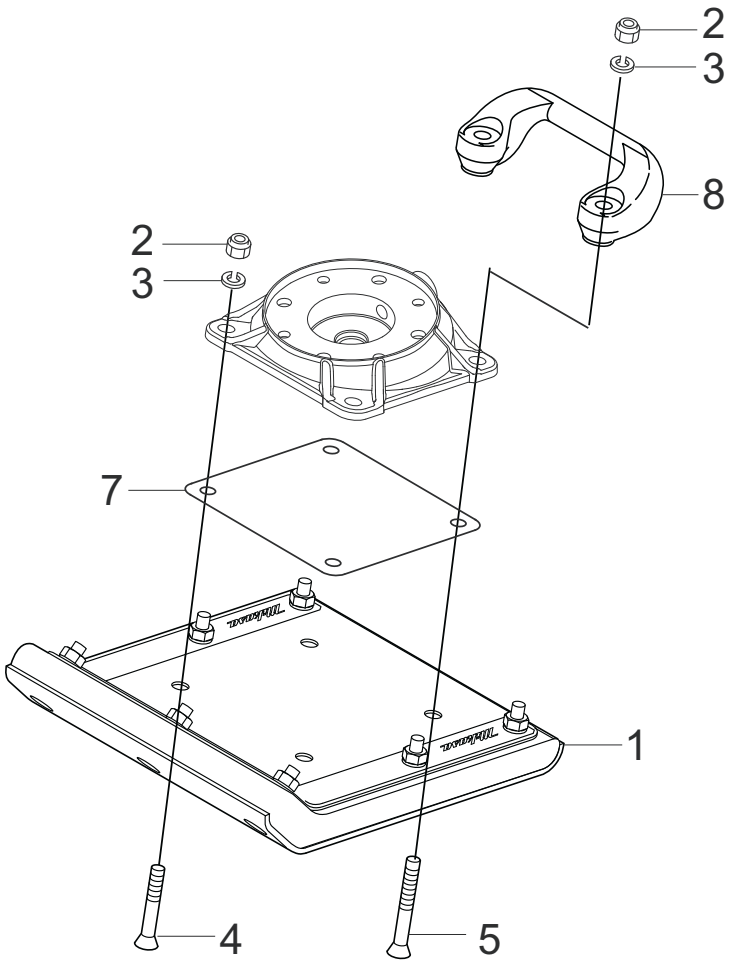
2
3
8
2
3
7
1
4
5

| NO. | PART NO. | PART NAME | QTY. | REMARKS |
|---|---|---|---|---|
| 1 | 362910150 | FOOT ASSY. 265W M4B | 1 | |
| 2 | 022711214 | NYLON NUT M12 | 4 | |
| 3. | 030212300 | WASHER, LOCK M12 | 4 | |
| 4. | 009110034 | SQUARE NECK BOLT 12X65 | 2 | |
| 5. | 009110035 | SQUARE NECK BOLT 12X95 | 2 | |
| 7. | 368347460 | FOOT COVER | 1 | |
| 8. | 363343390 | HANDLEBAR GRIP (FOOT) | 1 | |

# FUEL TANK AND HANDLE ASSY.

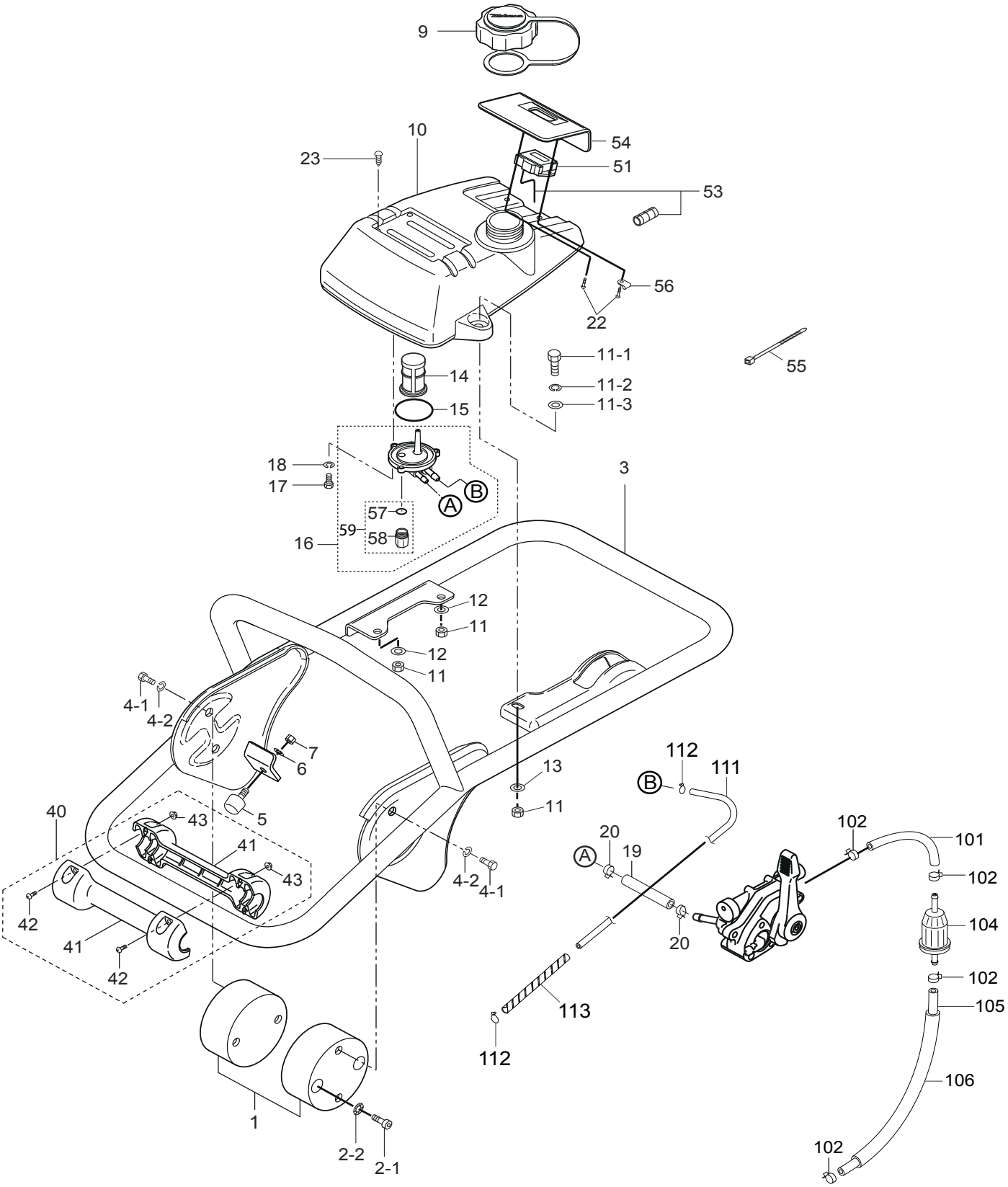

# FUEL TANK AND HANDLE ASSY.

| NO. | PART NO. | PART NAME | QTY. | REMARKS |
|---|---|---|---|---|
| 1 | 368347630 | SHOCK ABSORBER W/PIN | 2 | |
| 2-1 | 001521020 | SOCKET HEAD BOLT 10X20T | 4 | |
| 2-2 | 033121009 | TOOTHED LOCK WASHER B M10 | 4 | |
| 3 | 368119570 | HANDLE | 1 | |
| 4-1 | 001211020 | BOLT 10X20 H | 4 | |
| 4-2 | 030210250 | WASHER, LOCK M10 | 4 | |
| 5 | 939010270 | STOPPER RUBBER (70) | 1 | |
| 6 | 030208200 | WASHER, LOCK M8 | 1 | |
| 7 | 020308060 | NUT M8 | 1 | |
| 9 | 366350460 | CAP ASSY., FUEL TANK | 1 | |
| 10 | 366120250 | FUEL TANK/MTX70 | 1 | |
| 11 | 022710809 | NYLON NUT M8 | 3 | |
| 11-1 | 001200825 | BOLT 8X25 H | 3 | |
| 11-2 | 030208200 | WASHER, LOCK M8 | 3 | |
| 11-3 | 031108160 | WASHER, FLAT M8 | 3 | |
| 12 | 952401450 | WASHER 8.5X22X3 | 2 | |
| 13 | 031108160 | WASHER, FLAT M8 | 1 | |
| 14 | 954406010 | STRAINER #110 | 1 | |
| 15 | 050250420 | O-RING P42 | 1 | |
| 16 | 366350580 | HOLDER, FILTER | 1 | INCLUDES ITEMS W/$ |
| 17 | 001200515 | BOLT 5X15 H | 3 | |
| 18 | 030205130 | WASHER, LOCK M5 | 3 | |
| 19 | 959328406 | FUEL HOSE L=90 | 1 | |
| 20 | 954406420 | HOSE BAND 10.5 | 2 | |
| 22 | 009110037 | TAPPING SCREW 5X20 | 2 | |
| 23 | 094010053 | PAN HEAD SCREW 4X8 | 4 | |
| 40 | 366910030 | ROLLER ASSY. W/SCREW | 1 | INCLUDES ITEMS W/# |
| 41# | 366217170 | ROLLER | 2 | |
| 42# | 091005020 | SCREW 5X20 | 4 | |
| 43# | 022610505 | FLANGE NUT M5 H | 4 | |
| 51 | 980010330 | TP22 TACHO/HOUR METER | 1 | |
| 53 | 955010305 | CURL CORD TP22 | 1 | |
| 54 | 366345620 | FINISHER, METER | 1 | |
| 55 | 454010020 | CLAMP TC100 | 5 | |
| 56 | 954010270 | CLIP AB-3N | 1 | |
| 57$& | 366464270 | PACKING, HOLDER FILTER | 1 | |
| 58$& | 366464260 | CUP, HOLDER FILTER | 1 | |
| 59$ | 366900170 | CUP AND PACKING SET | 1 | INCLUDES ITEMS W/ & |
| 101 | 959328402 | FUEL HOSE 5.5 X 8.5 X 170 | 1 | |
| 102 | 0561080020 | HOSE BAND | 4 | |
| 104 | 26365012A3 | FILTER, IN-LINE FUEL | 1 | |
| 105 | 959328403 | FUEL HOSE 5.5X8.5X260 | 1 | |
| 106 | 959407720 | TUBE, VINYL L180 | 1 | |
| 111% | 959028301 | RETURN HOSE 3X6X600 | 1 | |
| 112% | 954408170 | HOSE CLIP | 2 | |
| 113% | 959021814 | SPIRAL TUBE 6D-200L | 1 | |

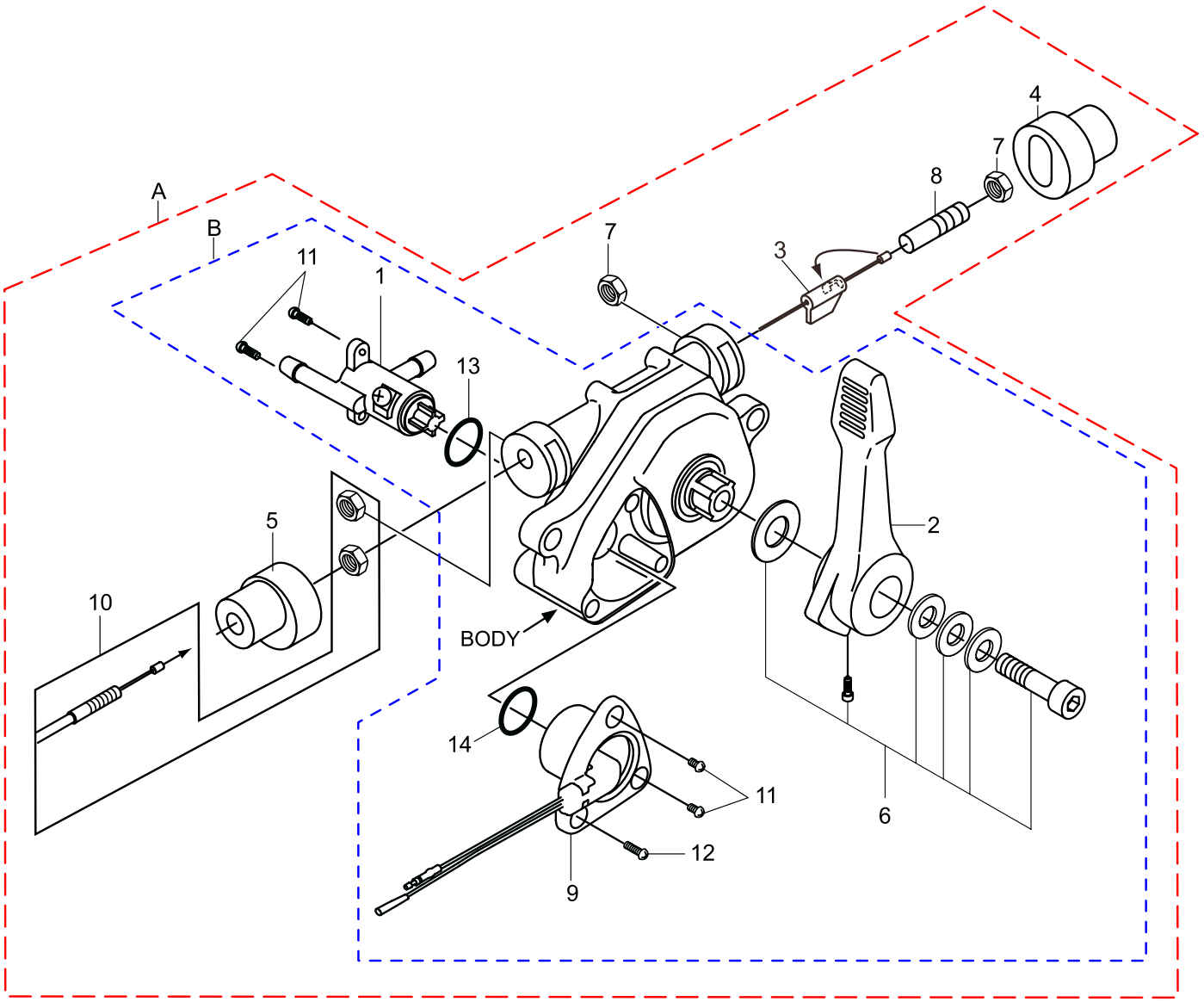
A
B
11
1
13
7
3
8
7
4
5
10
BODY
2
14
11
12
9
6

# COMBINATION LEVER ASSY.

| NO. | PART NO. | PART NAME | QTY. | REMARKS |
|---|---|---|---|---|
| A | 366900032 | COMB. LEVER W/ THROTTLE WIRE | 1 | INCLUDES ITEMS W/@ |
| B | 956200110 | COMB. LEVER W/OUT THROTTLE WIRE | 1 | INCLUDES ITEMS W/ # |
| 1@# | 366349430 | FUEL COCK | 1 | |
| 2@# | 366010310 | LEVER | 1 | |
| 3@ | 366010190 | SLIDER | 1 | |
| 4@ | 366010200 | END CAP | 1 | |
| 5@ | 366010210 | WIRE CAP | 1 | |
| 6@# | 366010220 | BOLT AND WASHER SET | 1 | |
| 7@ | 020408050 | NUT M8, H=5 | 2 | |
| 8@ | 959407650 | SOCKET HEAD SCREW/TH.WIRE | 1 | |
| 9@# | 366010320 | STOP SWITCH | 1 | |
| 10@ | 956100062 | THROTTLE WIRE | 1 | |
| 11@# | 094010051 | TAPPING SCREW B1 4X12 | 4 | |
| 12@# | 094010052 | TAPPING SCREW B1 4X30 | 1 | |
| 13@# | 050200150 | O-RING, P15 | 1 | |
| 14@# | 050200110 | O-RING, P11 | 1 | |

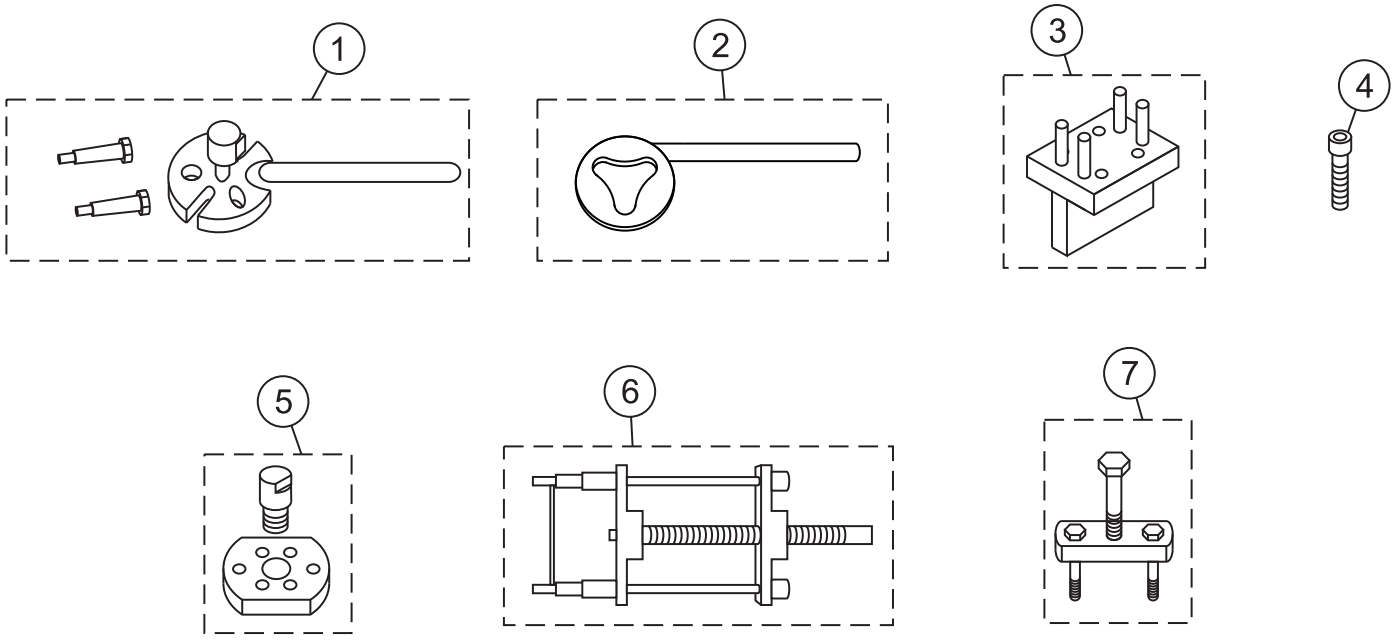
1
2
3
4
5
6
7

| NO. | PART NO. | PART NAME | QTY. | REMARKS |
|---|---|---|---|---|
| 1 | 981010400 | CLUTCH PULLER A | 1 | |
| 2 | 983010060 | CLUTCH MOUNTER | 1 | |
| 3 | 983910090 | PISTON ROD HOLDER | 1 | |
| 4 | 009110044 | SCK. HD. BOLT 8X50 (FULL THREAD) | 2 | CRANK GEAR REMOVER |
| 5 | 983910020 | CLUTCH PULLER B | 1 | |
| 6 | 983010040 | SPRING CYLINDER REMOVER | 1 | |
| 7 | 983910010 | PISTON END REMOVER | 1 | |

# ROBIN ER120D45000 ENGINE — CRANKCASE ASSY.

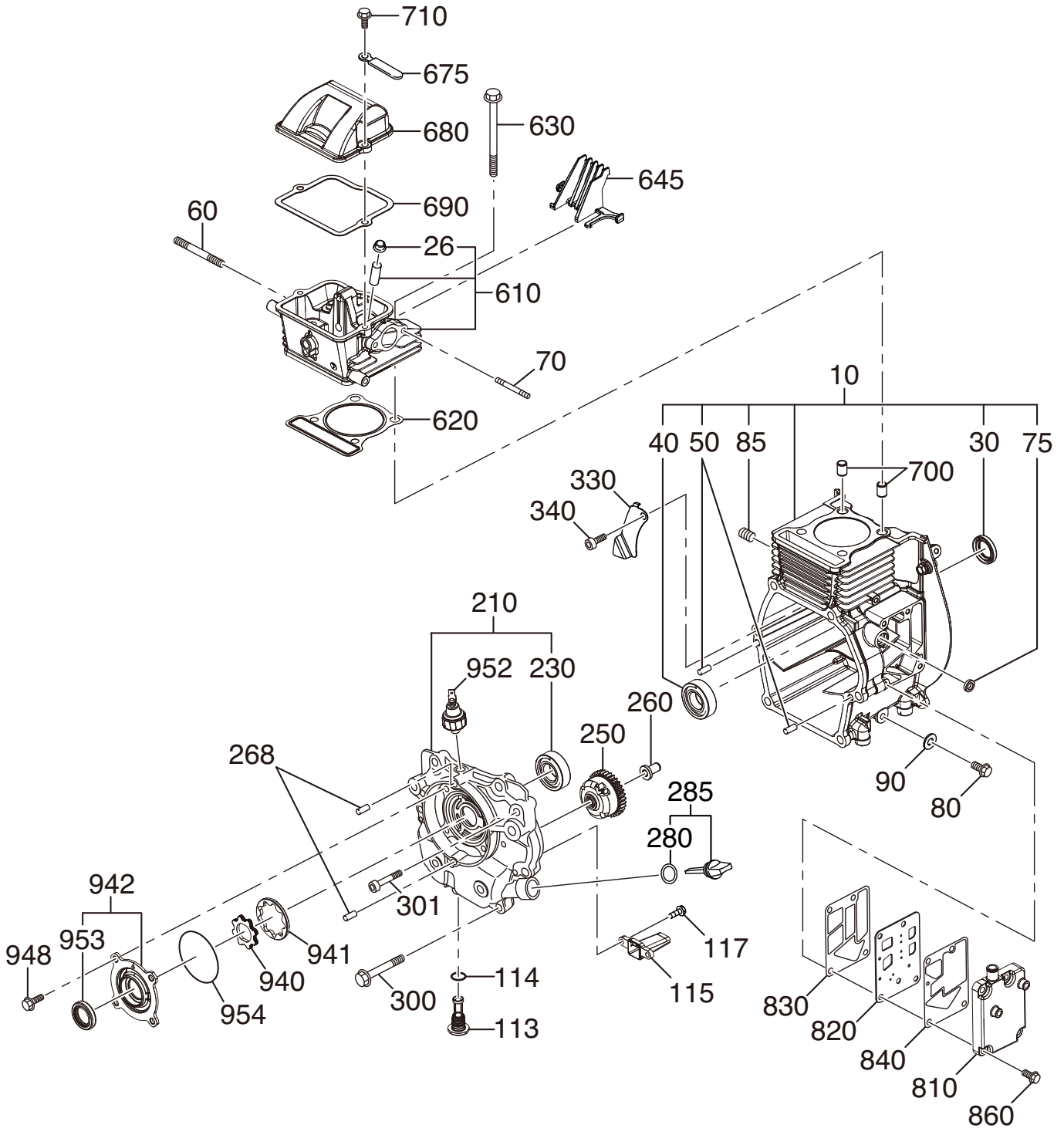


960 — GASKET SET

# ROBIN ER120D45000 ENGINE — CRANKCASE ASSY.

| NO. | PART NO. | PART NAME | QTY. | REMARKS |
|---|---|---|---|---|
| 10 | 21E10101M1 | CRANKCASE CP | 1 | INCLUDES ITEMS W/# |
| 26@ | 20F1601001 | STEM SEAL | 1 | |
| 30# | 0440200070 | OIL SEAL | 1 | |
| 40# | X600200200 | BALL BEARING | 1 | |
| 50# | 20F0060023 | DOWEL PIN | 2 | |
| 60 | X105080550 | STUD | 2 | |
| 70 | X105060470 | STUD | 2 | |
| 75# | X440080010 | OIL SEAL | 1 | |
| 80 | 0110080150 | FLANGE BOLT | 1 | |
| 85# | 0403140010 | PLUG | 1 | |
| 90 | X211080050 | GASKET(ALUMINIUM) | 1 | |
| 113 | 21E65001H2 | PLUG | 1 | |
| 114 | 0240110020 | O-RING | 1 | |
| 115 | 21E64201J3 | SUCTION PIPE | 1 | |
| 117 | X110050030 | FLANGE BOLT | 2 | |
| 210 | 21E11001L1 | MAIN BEARING COVER CP | 1 | INCLUDES ITEMSW/$ |
| 230$ | X600220030 | BALL BEARING | 1 | |
| 250 | 21E45001J1 | GOVERNOR GEAR CP | 1 | |
| 260 | 21E41901H3 | GOVERNOR SLEEVE | 1 | |
| 268 | 20F0060023 | DOWEL PIN | 2 | |
| 280 | X213160030 | GASKET | 1 | |
| 285 | 21E63601H1 | OIL GAUGE CP | 1 | |
| 300 | 0110080160 | FLANGE BOLT | 6 | |
| 301 | X119060110 | BOLT (SOCKET HEAD) | 1 | |
| 330 | 21E17001H3 | OIL SHELTER PLATE | 1 | |
| 340 | 0011305100 | BOLT AND WASHER ASSY | 1 | |
| 610 | 21E13001L0 | CYLINDER HEAD ASSY | 1 | INCLUDES ITEMS W/@ |
| 620 | 21E1500113 | GASKET(HEAD) | 1 | |
| 630 | X110080460 | FLANGE BOLT | 4 | |
| 645 | 21E18001H3 | GUIDE (S.PLUG) | 1 | |
| 680 | 21E15501H3 | ROCKER COVER | 1 | |
| 690 | 21E1600101 | GASKET CP (R.COVER) | 1 | |
| 700 | 20F1501103 | PIPE KNOCK | 2 | |
| 710 | X110060610 | FLANGE BOLT | 2 | |
| 810 | 21E14301H3 | BREATHER COVER | 1 | |
| 820 | 21E14401H1 | BREATHER PLATE CP | 1 | |
| 830 | 21E16002H3 | GASKET (B.PLATE) | 1 | |
| 840 | 21E16003H3 | GASKET (B.COVER) | 1 | |
| 860 | 0110060230 | FLANGE BOLT | 4 | |
| 940 | 21E63901H3 | INNER ROTOR | 1 | |
| 941 | 21E63902H3 | OUTER ROTOR | 1 | |
| 942 | 21E64001L1 | OIL PUMP COVER CP | 1 | INCLUDES ITEMS W/% |
| 948 | 0110060440 | FLANGE BOLT | 4 | |
| 952 | 21E76301H1 | SWITCH OIL PRESSURE | 1 | |
| 953% | 0440200070 | OIL SEAL | 1 | |
| 954 | 0240590020 | O-RING | 1 | |
| 960 | 21E9900117 | GASKET SET | 1 | |

# ROBIN ER120D45000 ENGINE — CRANKSHAFT, PISTON ASSY.

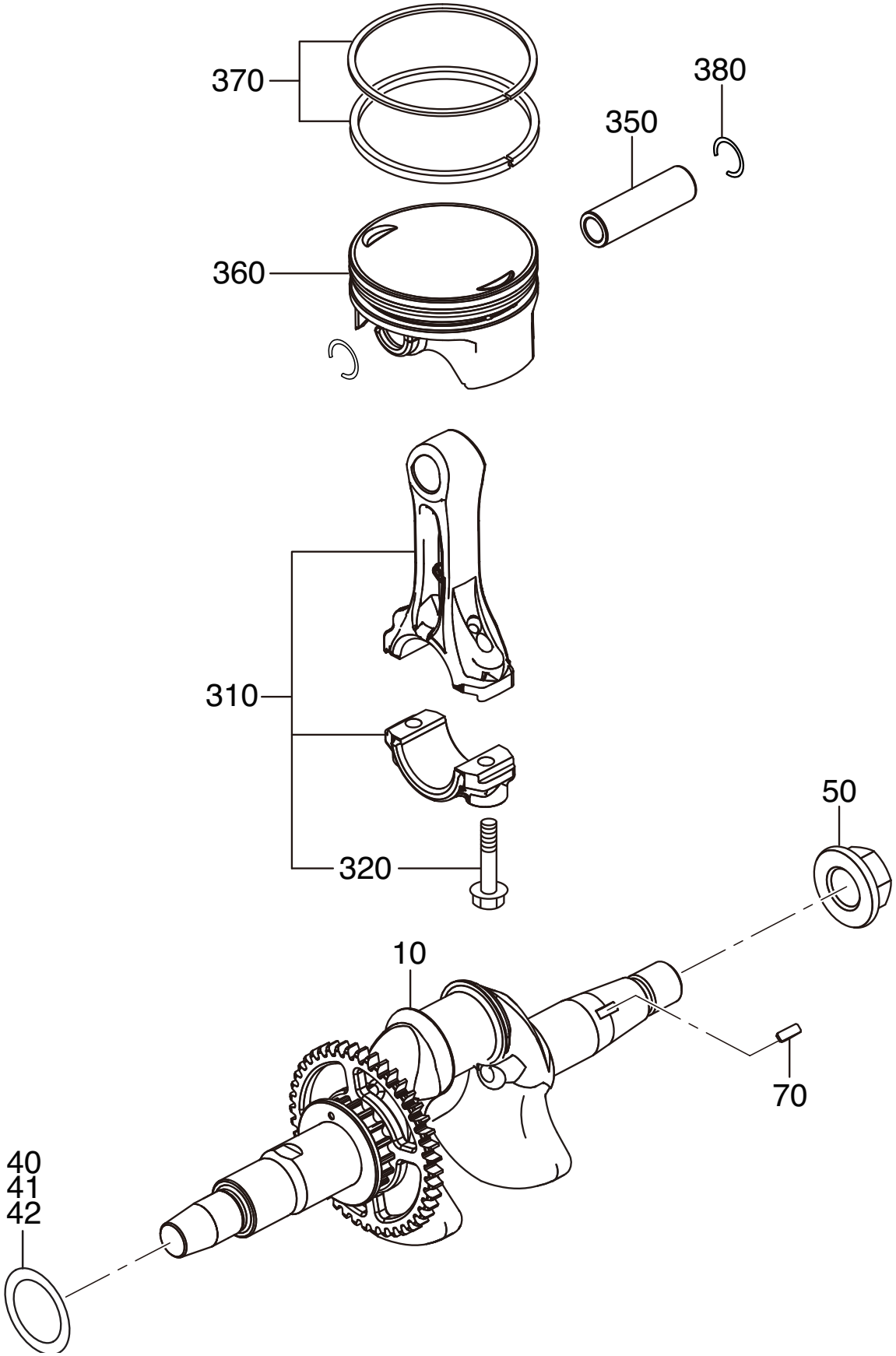

# ROBIN ER120D45000 ENGINE — CRANKSHAFT, PISTON ASSY.

| NO. | PART NO. | PART NAME | QTY. | REMARKS |
|---|---|---|---|---|
| 10 | 21E20201K1 | CRANKSHAFT CP | 1 | |
| 40 | X230220100 | SPACER | 1 | |
| 41 | X230220110 | SPACER | 1 | |
| 42 | X230220120 | SPACER | 1 | |
| 50 | 0180140020 | FLANGE NUT | 1 | |
| 70 | 0053203101 | WOODRUFF KEY | 1 | |
| 310 | 21E22501J0 | CONNECTING ROD ASSY ..... | 1 | .....INCLUDES ITEMS W/ # |
| 320# | 20F2300103 | CONNECTING ROD BOLT | 2 | |
| 350 | 21E23301H3 | PISTON PIN | 1 | |
| 360 | 21E23401H3 | PISTON STD | 1 | |
| 360 | 21E23403H3 | PISTON O.S. 0.25 | 1 | |
| 360 | 21E23404H3 | PISTON O.S. 0.50 | 1 | |
| 370 | 21E23501H7 | PISTON RING SET, STD | 1 | |
| 370 | 21E23502H7 | PISTON RING SET, 0.25 O.S | 1 | |
| 370 | 21E23503H7 | PISTON RING SET, 0.50 O.S. | 1 | |
| 380 | 21E2500103 | CLIP | 2 | |

# ROBIN ER120D45000 ENGINE — INTAKE, EXHAUST ASSY.

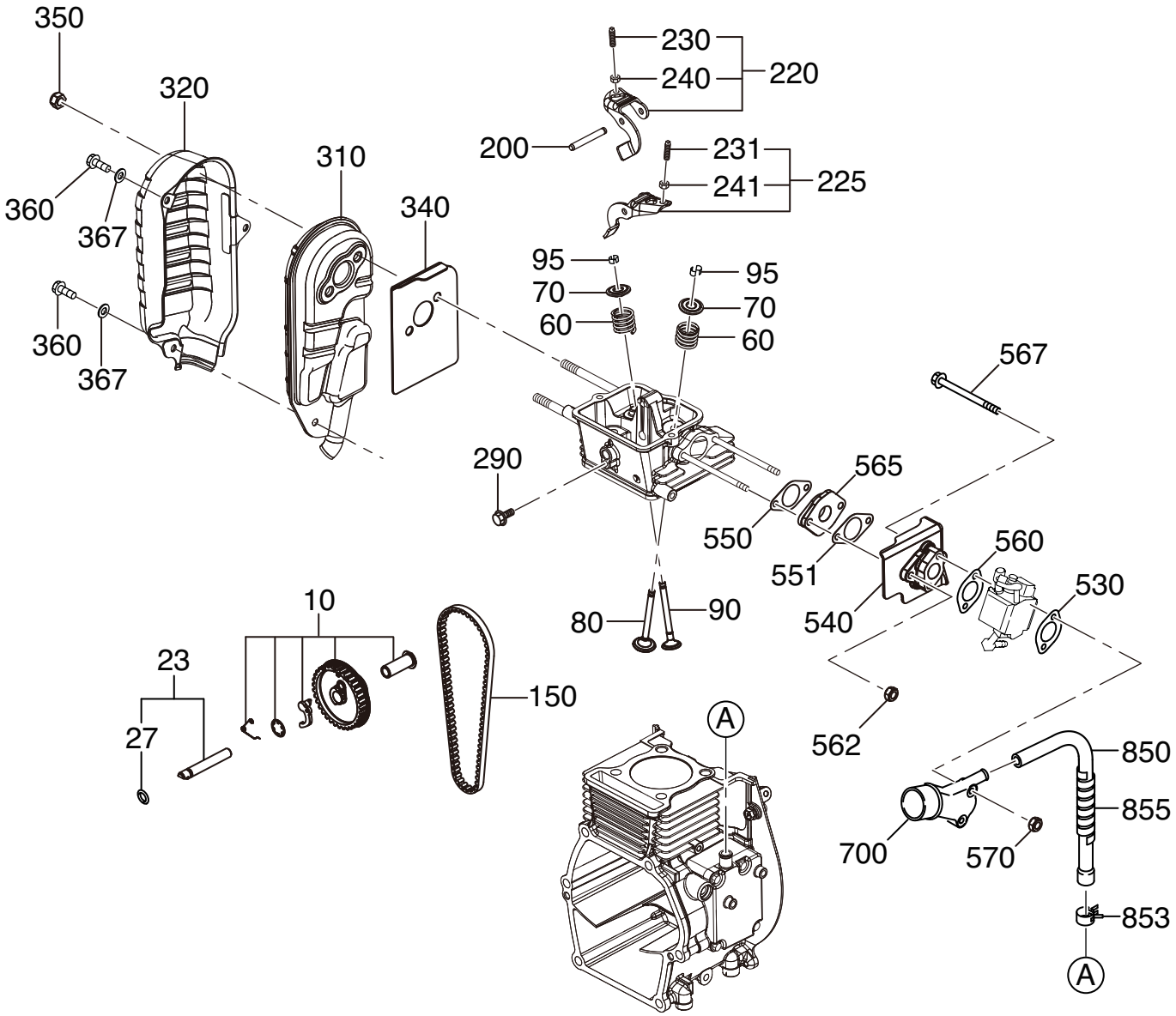

# ROBIN ER120D45000 ENGINE — INTAKE, EXHAUST ASSY.

| NO. | PART NO. | PART NAME | QTY. | REMARKS |
|---|---|---|---|---|
| 10 | 21E31601L1 | CAM PULLEYCP | 1 | |
| 23 | 21E35101H1 | PIN (CAM PULLEY) CP | 1 | INCLUDES ITEMS W/ # |
| 27# | 0240060010 | O-RING | 1 | |
| 60 | 2793360103 | VALVE SPRING | 2 | |
| 70 | 2693370103 | SPRING RETAINER | 2 | |
| 80 | 27633401H3 | INTAKE VALVE | 1 | |
| 90 | 27633501H3 | EXHAUST VALVE | 1 | |
| 95 | 20F10KA031 | COLLET VALVE | 4 | |
| 150 | 21E3560103 | TIMING BELT | 1 | |
| 200 | 2773500403 | PIN (ROCKER) | 1 | |
| 220 | 21E36101H0 | ROCKER ARM INTAKE ASSY | 1 | INCLUDES ITEMS W/ $ |
| 225 | 21E36102H0 | ROCKER ARM EXHAUST ASSY | 1 | INCLUDES ITEMS W/ @ |
| 230$ | 20A0140100 | ADJUST SCREW | 1 | |
| 231@ | 20A0140100 | ADJUST SCREW | 1 | |
| 240$ | 20A0180100 | NUT | 1 | |
| 241@ | 20A0180100 | NUT | 1 | |
| 290 | 20F0060010 | FLANGE BOLT | 1 | |
| 310 | 21E30101K2 | MUFFLER UN | 1 | |
| 320 | 21E34201L2 | MUFFLER COVER UN | 1 | |
| 360 | X130060330 | BOLT AND WASHER ASSY | 2 | |
| 367 | 0200060120 | WASHER | 2 | |
| 340 | 21E35201H3 | GASKET (MUFFLER) | 1 | |
| 350 | 0176080020 | SELF LOCK NUT | 2 | |
| 530 | 1066500203 | GASKET (CARB.) | 1 | |
| 540 | 21E32902J3 | INSULATOR 2 | 1 | |
| 550 | 2823590103 | GASKET (INSULATOR) | 1 | |
| 551 | 21E35001H3 | GASKET (INSULATOR) | 1 | |
| 560 | 21E35002H3 | GASKET (CARB) | 1 | |
| 562 | 20F6060020 | SELF LOCK NUT | 2 | |
| 565 | 21E32901H3 | INSULATOR 1 | 1 | |
| 567 | 0100050110 | BOLT | 2 | |
| 570 | 0176050010 | SELF LOCK NUT | 2 | |
| 700 | 21E33001H3 | INTAKE PIPE (D) | 1 | |
| 850 | 21E16103H3 | RUBBER PIPE | 1 | |
| 853 | 0561130010 | HOSE CLAMP | 1 | |
| 855 | 21E19001H3 | SPIRAL TUBE | 1 | |

# ROBIN ER120D45000 ENGINE — GOVERNOR, OPERATION ASSY.

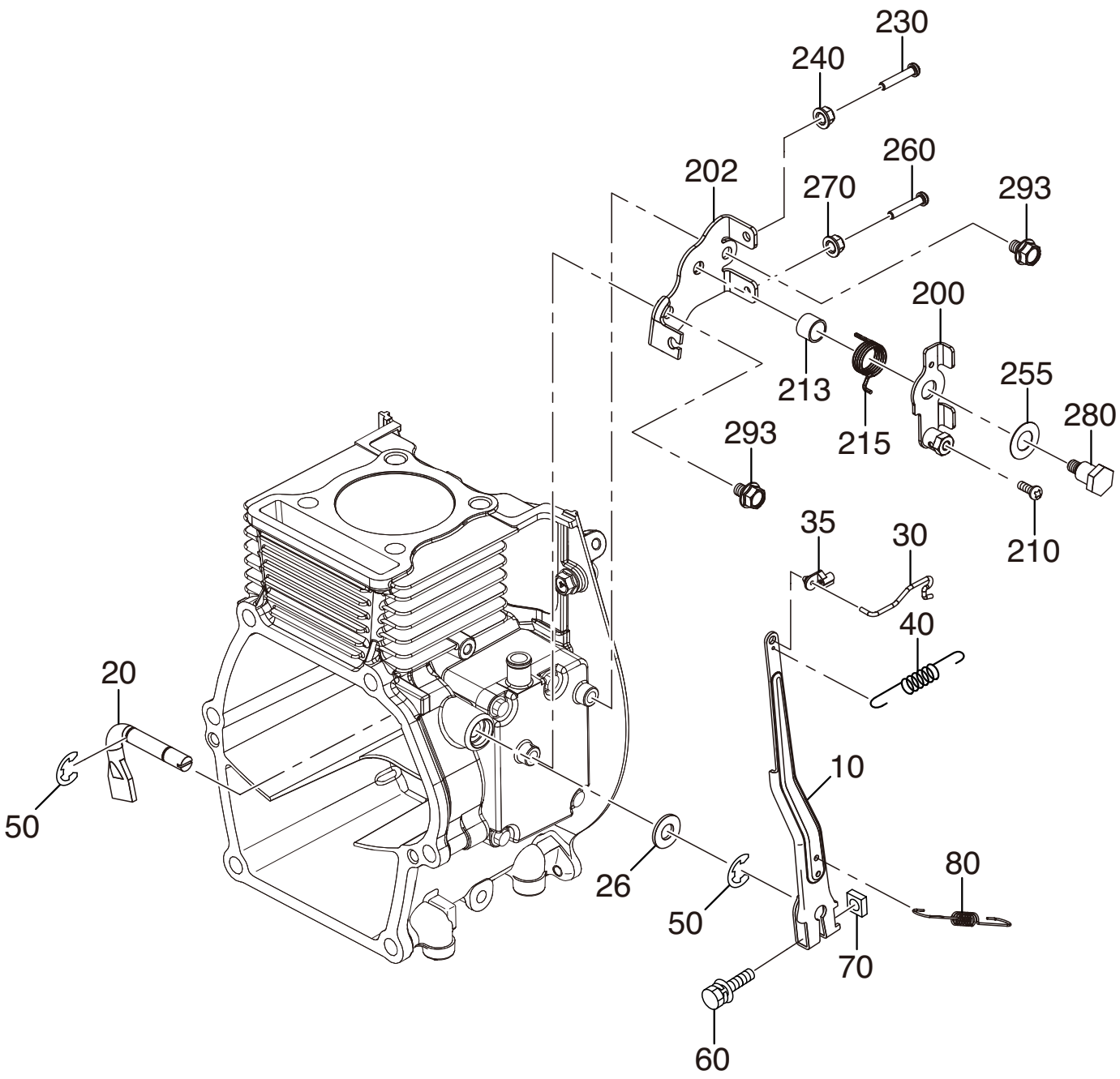

# ROBIN ER120D45000 ENGINE — GOVERNOR, OPERATION ASSY.

| NO. | PART NO. | PART NAME | QTY. | REMARKS |
|---|---|---|---|---|
| 10 | 21E42301H3 | GOVERNOR LEVER | 1 | |
| 20 | 21E42201J3 | GOVERNOR SHAFT | 1 | |
| 26 | 20F1108000 | WASHER | 1 | |
| 30 | 21E42701J1 | GOVERNOR ROD CP | 1 | |
| 35 | 2844560103 | LINKAGE BUSHING | 1 | |
| 40 | 21E4280103 | ROD SPRING | 1 | |
| 50 | 0031306000 | CLIP | 2 | |
| 60 | 20F1406300 | BOLT AND WASHER ASSY | 1 | |
| 70 | 0186060020 | NUT | 1 | |
| 80 | 21E4250113 | GOVERNOR SPRING | 1 | |
| 200 | 21E43301J0 | SPEED CONT. LEVER ASSY | 1 | |
| 202 | 21E46002J1 | BASE PLATE CP | 1 | |
| 210 | 0043104140 | SCREW, PANHEAD | 1 | |
| 213 | 0230100040 | SPACER | 1 | |
| 215 | 2264500313 | RETURN SPRING | 1 | |
| 230 | X140050110 | SCREW | 1 | |
| 240 | 0021705000 | NUT | 1 | |
| 255 | 0217100020 | FRICTION WASHER | 1 | |
| 260 | X140050110 | SCREW | 1 | |
| 270 | 0021705000 | NUT | 1 | |
| 280 | 2264310301 | LINK PIVOT CP | 1 | |
| 293 | 20F0060010 | FLANGE BOLT | 2 | |

# ROBIN ER120D45000 ENGINE — COOLING ASSY.

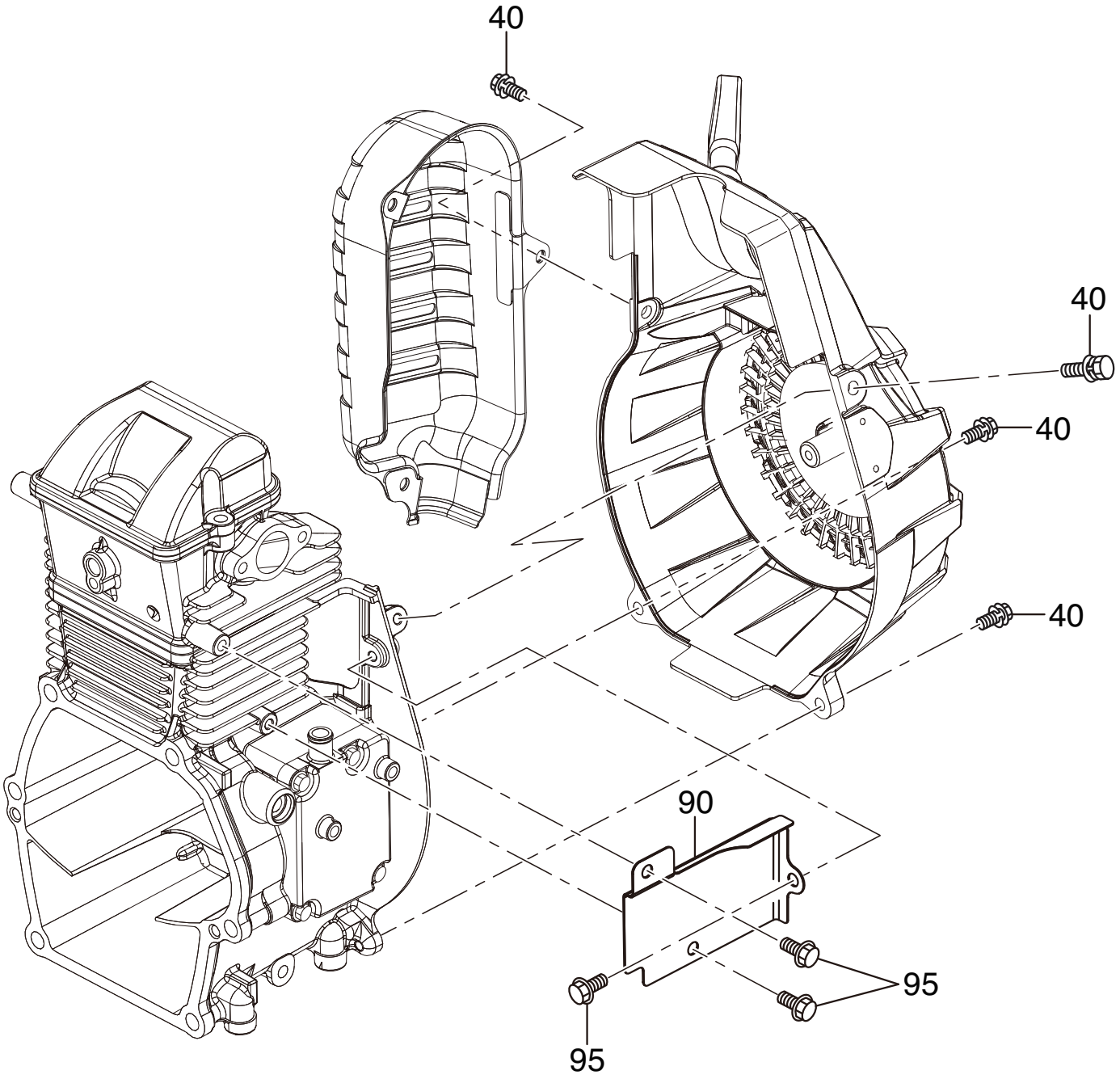

# ROBIN ER120D45000 ENGINE — COOLING ASSY.

| NO. | PART NO. | PART NAME | QTY. | REMARKS |
|---|---|---|---|---|
| 40 | X130060340 | BOLT AND WASHER ASSY | 4 | |
| 90 | 21E52601H3 | CYLINDER BAFFLE | 1 | |
| 95 | 20F0060010 | FLANGE BOLT | 3 | |

# ROBIN ER120D45000 ENGINE — STARTING ASSY.

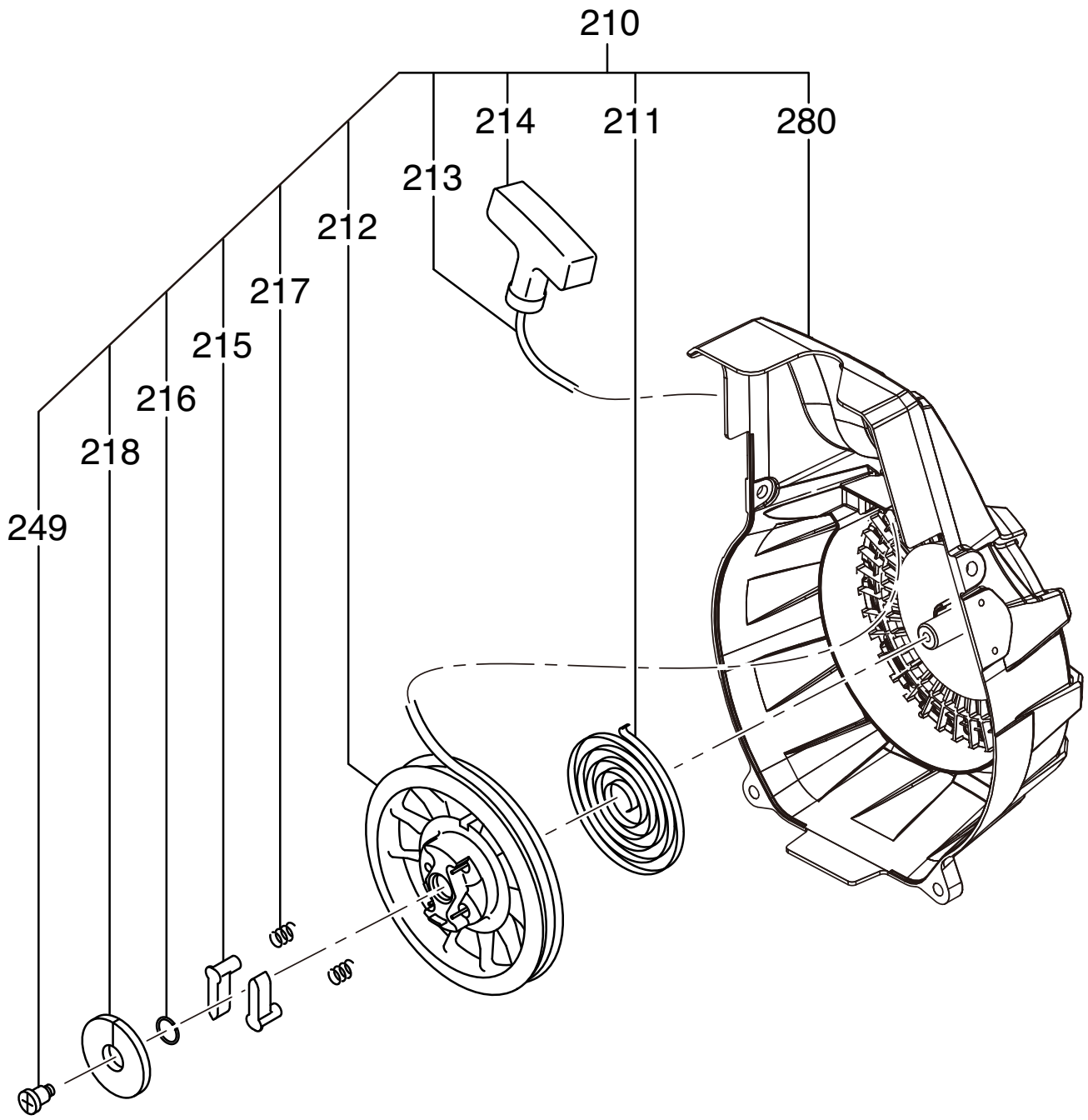

# ROBIN ER120D45000 ENGINE — STARTING ASSY.

| NO. | PART NO. | PART NAME | QTY. | REMARKS |
|---|---|---|---|---|
| 210 | 21E50201L0 | RECOIL STARTER ASSY | 1 | INCLUDES ITEMS W/ # |
| 211# | 20F5011508 | SPIRAL SPRING | 1 | |
| 212# | 21ES022008 | REEL | 1 | |
| 213# | 21E5011008 | STARTER ROPE | 1 | |
| 214# | 20F5010018 | STARTER KNOB | 1 | |
| 215# | 20F5022508 | RATCHET | 2 | |
| 216# | 2745013108 | FRICTION SPRING | 1 | |
| 217# | 2275013508 | RETURN SPRING | 2 | |
| 218# | 21E5026008 | RATCHET GUIDE | 1 | |
| 249# | 20B5010108 | SET SCREW | 1 | |
| 280# | 21E5015018 | STARTER CASE CP | 1 | |

# ROBIN ER120D45000 ENGINE — CARBURETOR ASSY.

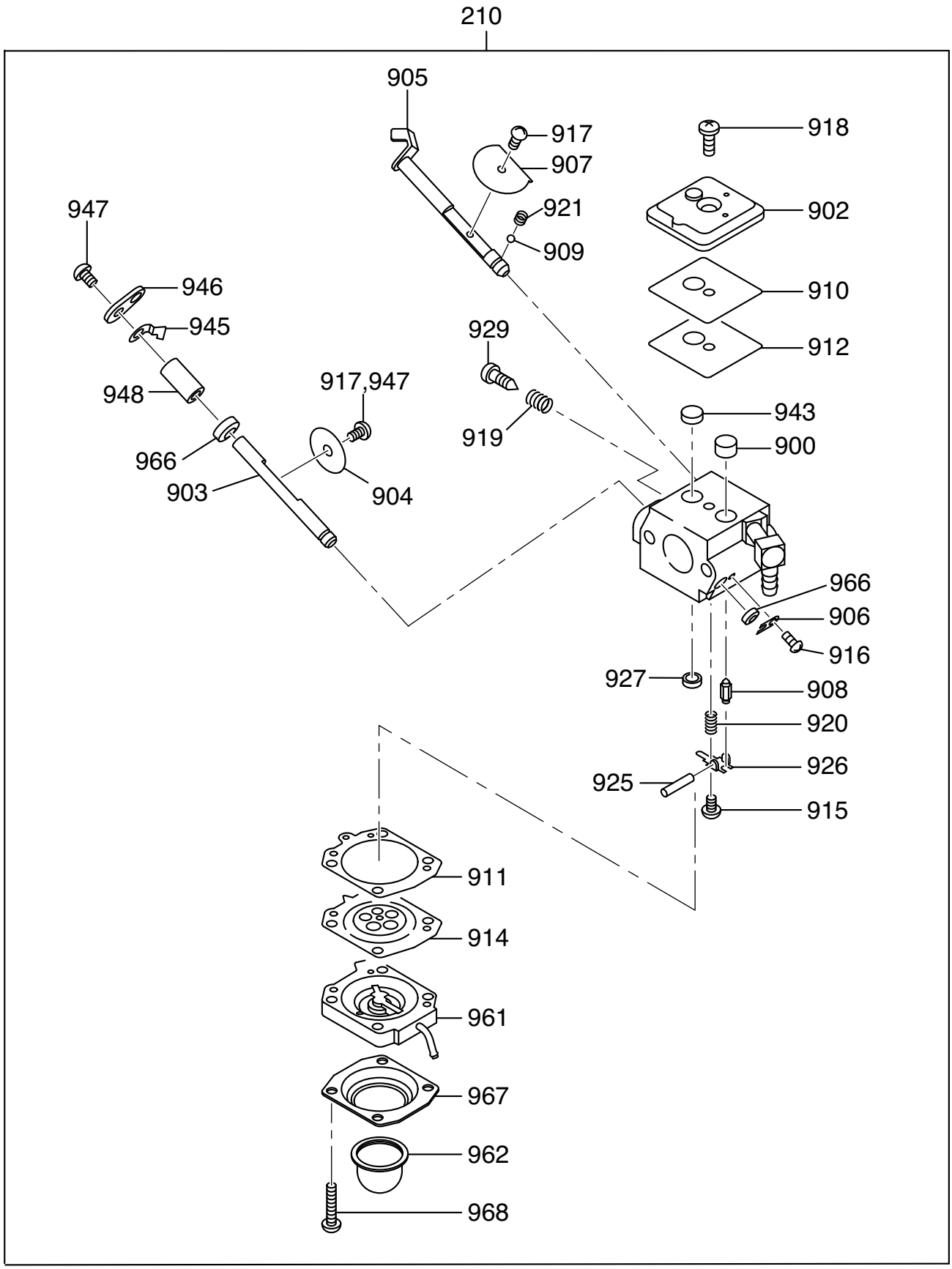

# ROBIN ER120D45000 ENGINE — CARBURETOR ASSY.

| NO. | PART NO. | PART NAME | QTY. | REMARKS |
|---|---|---|---|---|
| 210 | 21E6240100 | CARBURETOR ASSY ..... | 1 | ..... INCLUDES ITEMS W/# |
| 900# | 5016004010 | SCREEN INLET | 1 | |
| 902# | 2526261308 | COVER PUMP | 1 | |
| 903# | 2526261208 | SHAFT THROTTLE | 1 | |
| 904# | 1616233508 | VALVE THROTTLE | 1 | |
| 905# | 2846260308 | SHAFT ASSY CHOKE | 1 | |
| 906# | 5106045040 | CLIP THROTTLE SHAFT | 1 | |
| 907# | 2846260408 | VALVE CHOKE | 1 | |
| 908# | 1616255208 | VALVE, INLET NEEDLE | 1 | |
| 909# | 1476258408 | BALL | 1 | |
| 910# | 1616238008 | GASKET, PUMP | 1 | |
| 911# | 2526261808 | GASKET, METERING DIA. | 1 | |
| 912# | 2526261008 | DIAPHRAGM PUMP | 1 | |
| 914# | 2526261708 | DIAPHRAGM ASSY,METERING | 1 | |
| 915# | 2526261908 | SCREW | 1 | |
| 916# | 1066257608 | SCREW ASSY | 1 | |
| 917# | 1476257308 | SCREW VALVE | 1 | |
| 918# | 2846260008 | SCREW | 1 | |
| 919# | 1616245408 | SPRING | 1 | |
| 920# | 1616245108 | SPRING, METERING LEVER | 1 | |
| 921# | 1476258308 | SPRING CHOKE | 1 | |
| 925# | 1616236808 | PIN, METERING LEVER | 1 | |
| 926# | 1616236908 | LEVER, METERING | 1 | |
| 927# | 1476257508 | PLUG WELCH | 1 | |
| 929# | 1616238508 | SCREW, IDLE ADJ. | 1 | |
| 943# | 2526261108 | SPRING PUMP | 1 | |
| 945# | 1616255108 | STOP THROTTLE | 1 | |
| 946# | 2526260308 | LEVER THROTTLE | 1 | |
| 947# | 1616255308 | SCREW | 2 | |
| 948# | 2526260208 | SPACER THROTTLE LEVER | 1 | |
| 961# | 2526261408 | BODY ASSY AIR PURGE | 1 | |
| 962# | 2526261508 | PUMP PRIMER | 1 | |
| 966# | 1476258608 | SEAL | 2 | |
| 967# | 2526261608 | COVER PRIMER PUMP | 1 | |
| 968# | 2526262008 | SCREW ASSY | 4 | |

# ROBIN ER120D45000 ENGINE — ELECTRIC DEVICE ASSY.

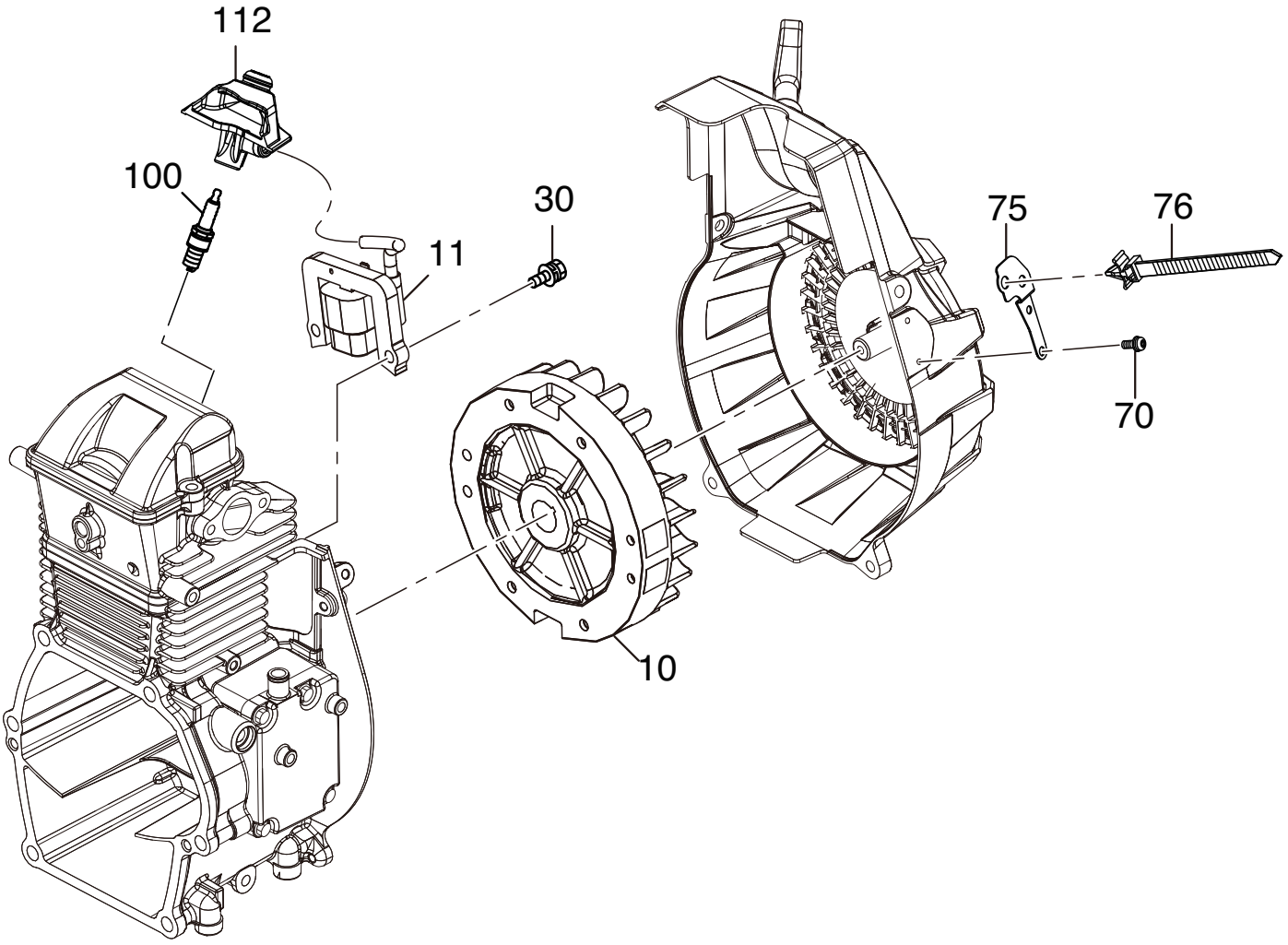

# ROBIN ER120D45000 ENGINE — ELECTRIC DEVICE ASSY.

| NO. | PART NO. | PART NAME | QTY. | REMARKS |
|---|---|---|---|---|
| 10 | 21E79230J1 | FLY WHEEL CP | 1 | |
| 11 | 21E79430J1 | IGNITION COIL CP | 1 | |
| 30 | 20F1406250 | BOLT AND WASHER ASSY | 2 | |
| 70 | X131040130 | SCREW AND WASHER ASSY | 2 | |
| 75 | 21E76501H3 | PLATE | 1 | |
| 76 | 0563000100 | WIRE BAND | 1 | |
| 100 | 0650140860 | SPARK PLUG | 1 | |
| 112 | 21E75001J3 | SPARK PLUG RUBBER CAP | 1 | |

# PARTS MANUAL

# HERE'S HOW TO GET HELP

PLEASE HAVE THE MODEL AND SERIAL NUMBER ON-HAND WHEN CALLING


## UNITED STATES

***Multiquip Inc.***

(310) 537- 3700
6141 Katella Avenue Suite 200
Cypress, CA 90630
E-MAIL: mq@multiquip.com
WEBSITE: www.multiquip.com

## CANADA

***Multiquip***

(450) 625-2244
4110 Industriel Boul.
Laval, Quebec, Canada H7L 6V3
E-MAIL: infocanada@multiquip.com

## UNITED KINGDOM

***Multiquip (UK) Limited Head Office***

0161 339 2223
Unit 2, Northpoint Industrial Estate,
Globe Lane,
Dukinfield, Cheshire SK16 4UJ
E-MAIL: sales@multiquip.co.uk



© COPYRIGHT 2021, MULTIQUIP INC.

Multiquip Inc, the MQ logo are registered trademarks of Multiquip Inc. and may not be used, reproduced, or altered without written permission. All other trademarks are the property of their respective owners and used with permission.


This manual MUST accompany the equipment at all times. This manual is considered a permanent part of the equipment and should remain with the unit if resold.

The information and specifications included in this publication were in effect at the time of approval for printing. Illustrations, descriptions, references and technical data contained in this manual are for guidance only and may not be considered as binding. Multiquip Inc. reserves the right to discontinue or change specifications, design or the information published in this publication at any time without notice and without incurring any obligations.

Your Local Dealer is:

MULTIQUIP®