QP2HLF

2" Centrifugal Pump

GALLONS PER MINUTE

158 (598 L)

HEAD

115 ft (35 M)

ENGINE

Honda GX120

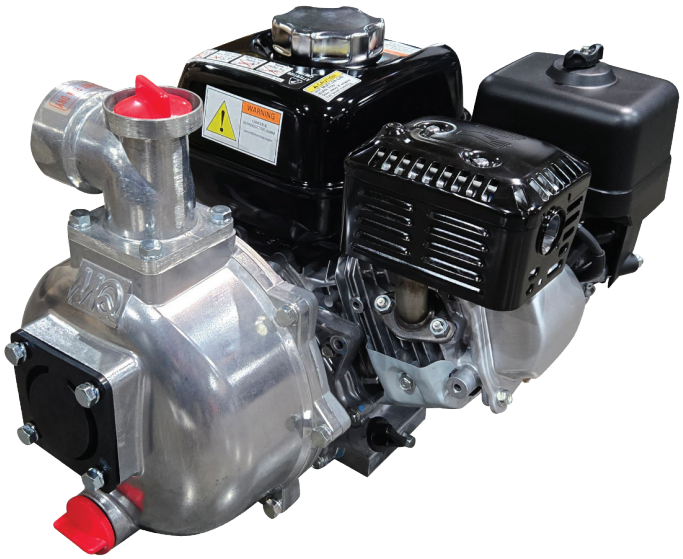

APPLICATIONS

Agricultural - Construction Sites - Emergency Response - Excavation - Farms - Floods - Irrigation - Jobsite - Drainage - Mining - Municipalities - Standing Water - Swimming Pools - Quarries - Water Departments - Water Supply from Lakes/Rivers - Water Trailers/Trucks

STANDARD FEATURES

- Maximum pumping capacity of **158 gallons (598 liters) per minute.**
- Maximum lift of **25 feet (7.6 meters).**
- Aluminum body with cast-iron fittings.
- **High-Efficiency impeller** and volute for maximum fluid transfer.
- Cast Iron impeller and volute for abrasion resistance/long life.
- Silicon carbide mechanical seal provides **extreme abrasion resistance** and **high temperature operation.**
- **Discharge port rotates 180°** for hose orientation.
- 1" (25.4 mm) diameter fill and drain ports.
- Engine oil-alert to protect the engine in the case of low engine oil.

WARRANTY*

QP2HLF: 24 months from date of purchase.

Honda GX120 Engine: 36 months from date of purchase.

Hoses: 3 months from date of purchase.

**Refer to the MULTIQUIP NEW PRODUCT LIMITED WARRANTY FOR FULL TERMS AND CONDITIONS.*

© COPYRIGHT 2026 MULTIQUIP INC. (REV 03 17 2026)

QP2HLF

FEATURES

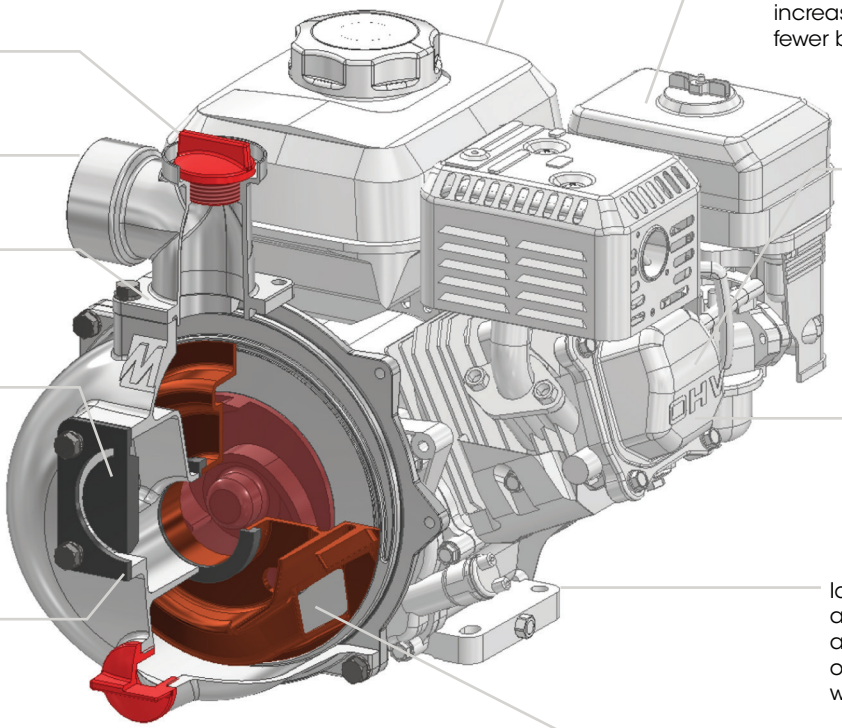

0.528 gallon fuel tank provides 2 hours of continuous operation

Dual air filtration minimizes internal wear from airborne particles to increase engine life with fewer breakdowns

1″ diameter fill and drain ports

Replaceable, 2″ NTP nipple discharge port

Discharge port easily rotates 180° for hose orientation

Overhead values provide smoother fuel intake and more complete exhaust, boosting combustion efficiency

Check valve maintains prime, keeps water in pump casing for easy startup

Trusted Honda GX120 engine with low oil shutdown

Ideal for water trailer and water truck applications. Standard on MQ WT5C2/WT8C water trailers.

Die-cast brushed aluminum casing ensures optimum flow and provides resilience to sudden, momentary high internal pressure demands

Cast iron volute reduces pump housing wear and increases pump life while supporting faster prime and optimum fluid flow dynamics

3 vane impeller for enhanced performance and high efficiency

Durable mechanical seal made of silicon carbide and 304 stainless steel to meet the rigorous demands of abrasion and high temperature operation

© COPYRIGHT 2026 MULTIQUIP INC. (REV 03172026)

QP2HLF

PUMP CURVE

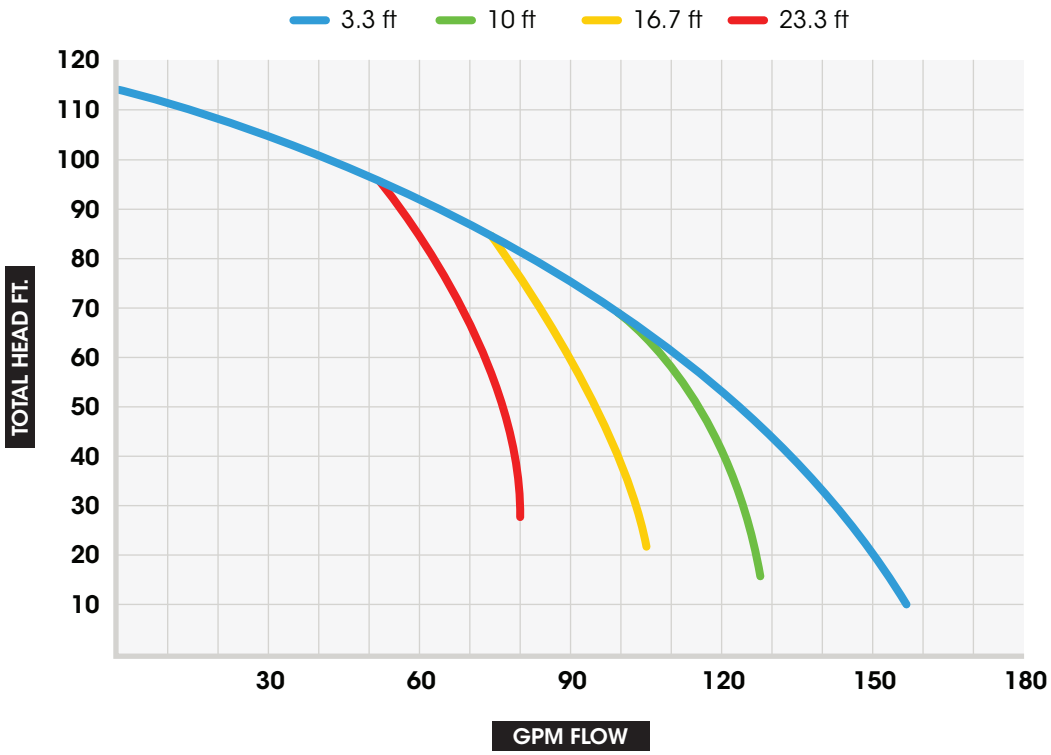

PUMP DIMENSIONS

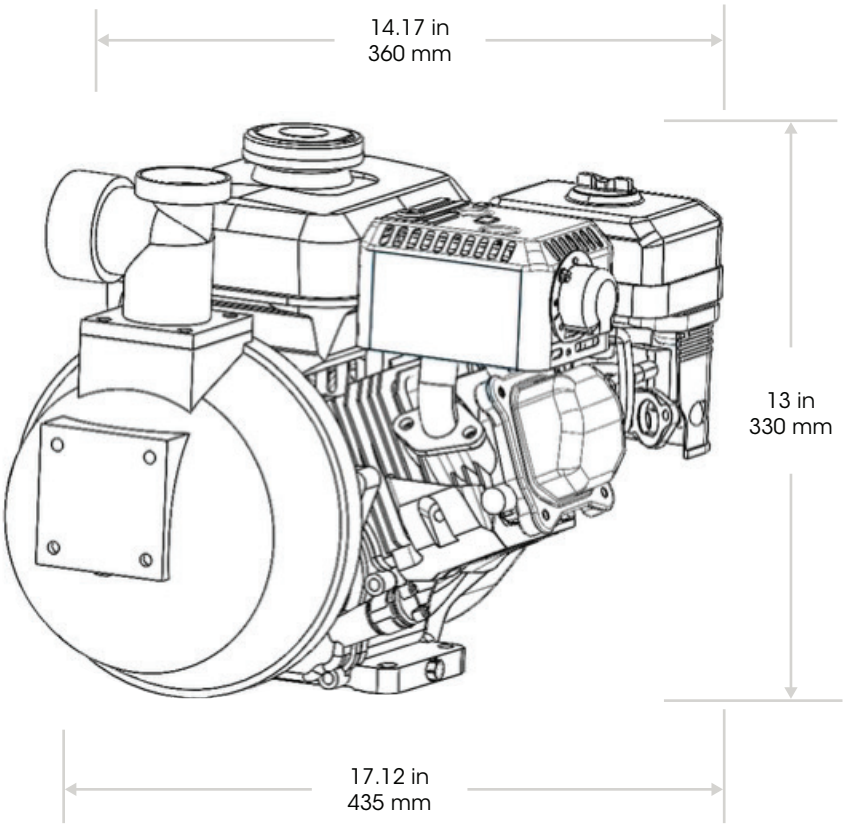

© COPYRIGHT 2026 MULTIQUIP INC. (REV 03172026)

QP2HLF

SPECIFICATIONS

PUMP SPECIFICATIONS	
MODEL	QP2HLF
TYPE	CENTRIFUGAL PUMP
IMPELLER TYPE	SEMI-OPEN
MAX. PUMP CAPACITY	158 GALLONS/MINUTE (598 L/MIN)
MAX. SUCTION	25 FT (7.62 M)
MAX. HEAD	115.5 FT (35.2 M)
SUCTION/DISCHARGE PORT SIZE	2 IN (50.8 MM)
THREAD TYPE	NPT (MALE)
PSI	50.0
IMPELLER MATERIAL	CAST IRON
VOLUTE MATERIAL	CAST IRON
PUMP CASING MATERIAL	DIE-CAST ALUMINUM
CHECK VALVE MATERIAL	NITRILE BUTADIENE RUBBER
MECHANICAL SEAL MATERIAL	SILICON CARBIDE/304 STAINLESS STEEL
DRAIN AND FILL CAP MATERIAL	ACRYLONITRILE BUTADIENE STYRENE
SALT OR CHEMICALS	NO
PUMP HARDWARE	STEEL
MAX. FLUID TEMPERATURE	104° F (40° C)
MAX. SOLID HANDLING	0.33 IN (8.5 MM)
O-RINGS	NITRILE BUTADIENE RUBBER
STRAINER SIZE	2 IN (50.8 MM) NPT
STRAINER INLET SIZE	0.33 IN (8.5 MM)

ENGINE SPECIFICATIONS	
MAKE/MODEL	HONDA/GX120
EMISSIONS	EPA CERTIFIED AND CARB PREEMPT
STARTING METHOD	RECOIL START
DESIGN	AIR-COOLED, 4 STROKE, SINGLE CYLINDER, OHV, HORIZONTAL SHAFT
DISPLACEMENT	122 CC (7.4 CU-IN)
BORE X STROKE	2.4 IN X 1.7 IN (60 MM X 43.5 MM)
HORSE POWER (kW)	3.2 (2.4)
ENGINE SPEED	3,600 RPM
GOVERNOR SPEED	MECHANICAL
SOUND LEVEL dB(A) AT 23 FT	84
AIR CLEANER	DUAL ELEMENT
LUBRICATION SYSTEM	SPLASH
SPARK ARRESTOR	OPTIONAL
OIL CAPACITY	0.59 QUARTS (0.56 LITERS)
OIL TYPE	SAE 10W-30
LOW OIL SHUT-DOWN	STANDARD

FUEL SPECIFICATIONS	
RECOMMENDED FUEL	UNLEADED GASOLINE
FUEL TANK CAPACITY	0.528 GALLONS (2.0 L)
FUEL CONSUMPTION	0.26 GPH (0.96 LPH)
RUN TIME	2 HOURS

WEIGHT AND DIMENSIONS	
DRY WEIGHT	43.0 LB (19.5 KG)
DIMENSIONS	17.12 x 14.17 x 13.0 IN (480 x 360 x 330 MM)

NOTICE Features and Specifications are subject to change without notice.

OPTIONS

SUCTION HOSES

- **HS220C –** 2″ x 20 ft., 65psi, rigid PVC helix reinforced, NPS thread
- **HSQ220C –** 2″ x 20 ft., 65psi, rigid PVC helix reinforced, NPT thread, Male Camlock, includes one quick disconnect coupler
- **HS225C –** 2″ x 25 ft., 65psi, rigid PVC helix reinforced, NPS thread
- **HSQ225C –** 2″ x 25 ft., 65psi, rigid PVC helix reinforced, NPT thread, Male Camlock, includes one quick disconnect coupler
- **A200A –** 2″ type A coupler, male quick disconnect x female NPT

HS220C and HS225C HSQ220C and HSQ225C

DISCHARGE HOSES

- **HD250C –** 2″ x 50 ft., 75psi, NPS thread
- **HDQ250C –** 2″ x 50 ft., 75psi, NPT thread, includes one quick disconnect coupler
- **A200A –** 2″ type A coupler, male quick disconnect x female NPT

HD250C HDQ250C A200A

FILTER KIT

MKITPUMP-4 – (1) Air cleaner element, (1) spark plug, (5) flooding caps

© COPYRIGHT 2026 MULTIQUIP INC. (REV 03172026)