PARTS MANUAL

MULTIQUIP®

RAMMAX

MODELS

RX1575

RX157533

TRENCH ROLLER

S/N 5570001 AND BELOW

(YANMAR 3TNV76 DIESEL ENGINE)

Revision #0 (05/01/15)

To find the latest revision of this publication, visit our website at: www.multiquip.com

THIS MANUAL MUST ACCOMPANY THE EQUIPMENT AT ALL TIMES.

RX1575 Trench Roller

Table Of Contents 2
Parts Ordering Procedures 3
Explanation Of Code In Remarks Column 4
Suggested Spare Parts 5

Component Drawings

Nameplate And Decals 6-11
Drum Assembly 12-13
Drum Drive Assembly 14-15
Vibration Assembly 16-17
Center Beam Assembly 18-19
Center Beam Hose Assembly 20-21
Chassis Front Assembly 22-23
Chassis Rear Assembly 24-25
Engine Hood Assembly 26-27
Cover Hood Top Assembly 28-29
Cover Hood Bottom Assembly 30-31
Fuel Tank Assembly 32-33
Pendulum Support Assembly 34-35
Pendulum Joint Assembly 36-37
Steering Cylinder Assembly 38-39
Transport Securing Device Assembly 40-41
Diesel Engine Assembly 42-43
Engine Add-On Parts Assembly 44-51
Engine Electric Parts Assembly 52-53
Engine Cooler Assembly 54-55
Engine Air Filter Assembly 56-57
Engine Muffler Assembly 58-59
Variable Displacement Pump Assembly 60-61
Gear Pump Assembly 62-63
Hydraulic Oil Tank Assembly 64-65
Oil Cooler Assembly 66-67
Valve Block Assembly 68-69
Hydraulic Block Assembly 70-71
Hoses For Drive System Assembly 72-73
Suction And Leakage Assembly 74-75
Hoses For Steering System Assembly 76-77
Brake Hoses Assembly 78-79
Hoses For Vibration System Assembly 80-81
Cockpit Assembly 82-83
Holding Device With Battery Assembly 84-85
Shutdown Bar Assembly (Option) 86-87
Height Control Assembly Assembly 88-89
Filter Set Assembly 90-91

Terms And Conditions Of Sale — Parts 92

NOTICE

Part numbers are subject to change without notice.

www.multiquip.com

Ordering parts has never been easier!
Choose from three easy options:

Effective:
January 1st, 2008

Best Deal!

Order via Internet (Dealers Only):
Order parts on-line using Multiquip's SmartEquip website!

- View Parts Diagrams
- Order Parts
- Print Specification Information

If you have an MQ Account, to obtain a Username and Password, E-mail us at: parts@multiquip.com.

To obtain an MQ Account, contact your District Sales Manager for more information.

Goto www.multiquip.com and click on **Order** Parts to log in and save!

Use the *internet* and qualify for a 5% Discount on *Standard orders* for all orders which include complete part numbers.*

Note: Discounts Are Subject To Change

Order via Fax (Dealers Only):
All customers are welcome to order parts via Fax.
Domestic (US) Customers dial:
1-800-6-PARTS-7 (800-672-7877)

Fax your order in and qualify for a 2% Discount on *Standard orders* for all orders which include complete part numbers.*

Note: Discounts Are Subject To Change

Order via Phone: Domestic (US) Dealers Call:
1-800-427-1244

Non-Dealer Customers:
Contact your local Multiquip Dealer for parts or call 800-427-1244 for help in locating a dealer near you.

International Customers should contact their local Multiquip Representatives for Parts Ordering information.

When ordering parts, please supply:

- ❒ Dealer Account Number
- ❒ Dealer Name and Address
- ❒ Shipping Address (if different than billing address)
- ❒ Return Fax Number
- ❒ Applicable Model Number
- ❒ Quantity, Part Number and Description of Each Part
- ❒ Specify Preferred Method of Shipment:
  - ✓ UPS/Fed Ex
    - Priority One
    - Ground
    - Next Day
    - Second/Third Day
  - ✓ DHL
  - ✓ Truck

NOTICE

All orders are treated as *Standard Orders* and will ship the same day if received prior to 3PM PST.

WE ACCEPT ALL MAJOR CREDIT CARDS!

EXPLANATION OF CODE IN REMARKS COLUMN

The following section explains the different symbols and remarks used in the Parts section of this manual. Use the help numbers found on the back page of the manual if there are any questions.

NOTICE

The contents and part numbers listed in the parts section are subject to change **without notice**. Multiquip does not guarantee the availability of the parts listed.

SAMPLE PARTS LIST

NO.	PART NO.	PART NAME	QTY.	REMARKS
1	12345	BOLT	1	INCLUDES ITEMS W/%
2%		WASHER, 1/4 IN.		NOT SOLD SEPARATELY
2%	12347	WASHER, 3/8 IN.	1	MQ-45T ONLY
3	12348	HOSE	A/R	MAKE LOCALLY
4	12349	BEARING	1	S/N 2345B AND ABOVE

NO. Column

Unique Symbols — All items with same unique symbol (@, #, +, %, or >) in the number column belong to the same assembly or kit, which is indicated by a note in the "Remarks" column.

Duplicate Item Numbers — Duplicate numbers indicate multiple part numbers, which are in effect for the same general item, such as different size saw blade guards in use or a part that has been updated on newer versions of the same machine.

NOTICE

When ordering a part that has more than one item number listed, check the remarks column for help in determining the proper part to order.

PART NO. Column

Numbers Used — Part numbers can be indicated by a number, a blank entry, or TBD.

TBD (To Be Determined) is generally used to show a part that has not been assigned a formal part number at the time of publication.

A blank entry generally indicates that the item is not sold separately or is not sold by Multiquip. Other entries will be clarified in the "Remarks" Column.

QTY. Column

Numbers Used — Item quantity can be indicated by a number, a blank entry, or A/R.

A/R (As Required) is generally used for hoses or other parts that are sold in bulk and cut to length.

A blank entry generally indicates that the item is not sold separately. Other entries will be clarified in the "Remarks" Column.

REMARKS Column

Some of the most common notes found in the "Remarks" Column are listed below. Other additional notes needed to describe the item can also be shown.

Assembly/Kit — All items on the parts list with the same unique symbol will be included when this item is purchased.

Indicated by:

"INCLUDES ITEMS W/(unique symbol)"

Serial Number Break — Used to list an effective serial number range where a particular part is used.

Indicated by:

"S/N XXXXX AND BELOW"
"S/N XXXX AND ABOVE"
"S/N XXXX TO S/N XXX"

Specific Model Number Use — Indicates that the part is used only with the specific model number or model number variant listed. It can also be used to show a part is NOT used on a specific model or model number variant.

Indicated by:

"XXXXX ONLY"
"NOT USED ON XXXX"

"Make/Obtain Locally" — Indicates that the part can be purchased at any hardware shop or made out of available items. Examples include battery cables, shims, and certain washers and nuts.

"Not Sold Separately" — Indicates that an item cannot be purchased as a separate item and is either part of an assembly/kit that can be purchased, or is not available for sale through Multiquip.

RAMMAX 1575 TRENCH ROLLER WITH YANMAR 3TNV76 ENGINE

1 to 3 units

Qty.	P/N	Description
3	1-954075	OIL FILTER
3	1-954197	FUEL FILTER
3	1224448	AIR FILTER
2	1242184	BREATHER FILTER, HYDRAULIC
1	1183743	V-BELT
1	1-30005179	IGNITION SWITCH
3	114607	IGNITION KEYS
1	1-952347	OIL PRESSURE SWITCH
1	1-952346	WATER TEMP., SWITCH
3	1-921583	FUSE, 10 AMP
2	1-921585	FUSE, 25 AMP
3	1-944544	FUSE, 40 AMP

NOTICE

Part numbers on this Suggested Spare Parts list may supersede/replace the part numbers shown in the following parts lists.

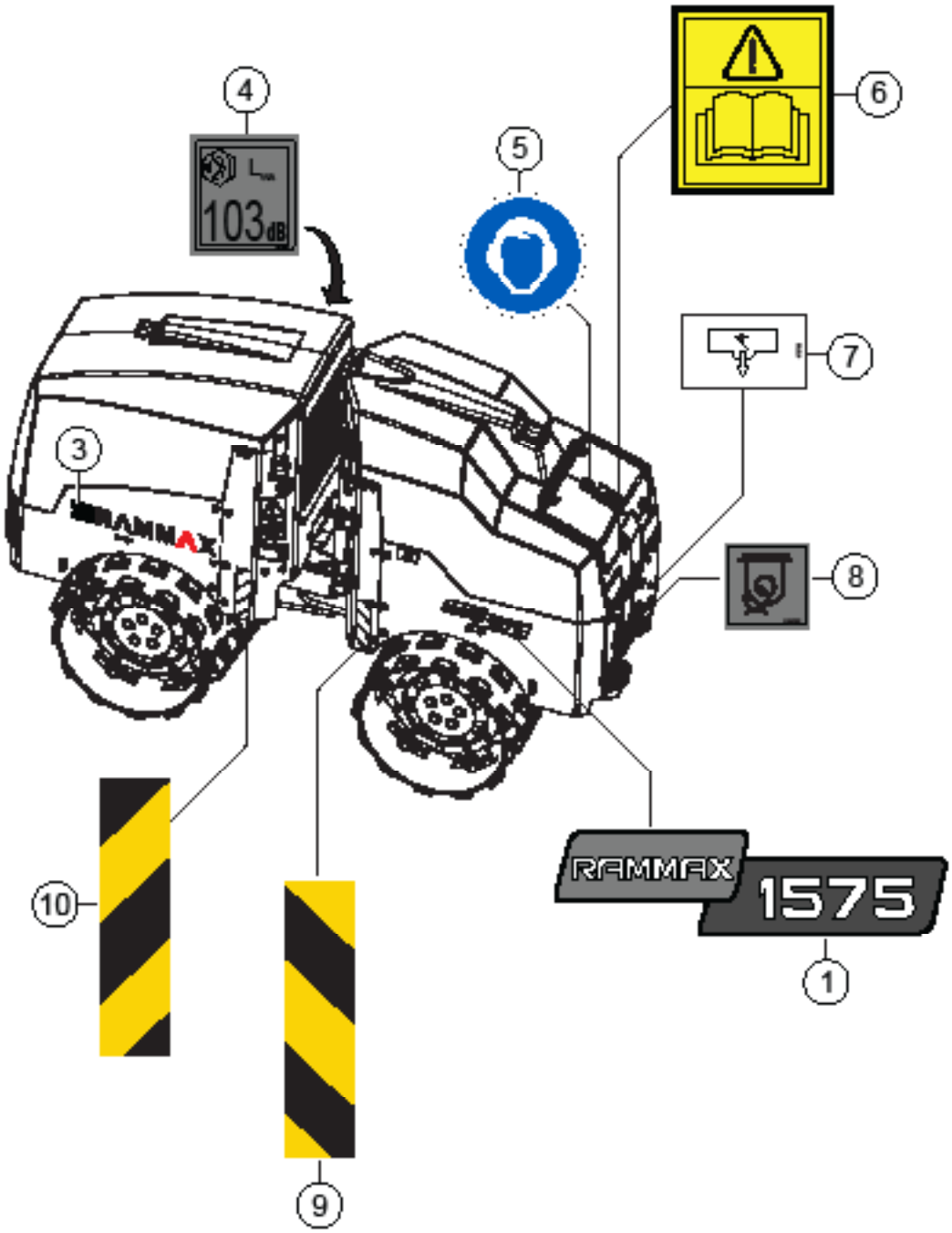
4
103dB
5
6
7
3
RAMMAX
8
10
9
RAMMAX
1575
1

NO.	PART NO.	PART NAME	QTY.	REMARKS
1	1231055	DECAL, RAMMAX 1575	1	
3	3-39115	DECAL, MQ RAMMAX	1	
4	1192647	DECAL, NOISE LEVEL	1	
5	1-413020	DECAL, WEAR NOISE PROTECTION	1	
6	1118436	DECAL, READ MANUALS	1	
7	1-473755	DECAL, HYDRAULIC OIL DRAIN	1	
8	1155236	DECAL, TIE DOWN HOOK	1	
9	1176594	DECAL, WARNING REFLECTOR	2	
10	1176595	DECAL, WARNING REFLECTOR	2	

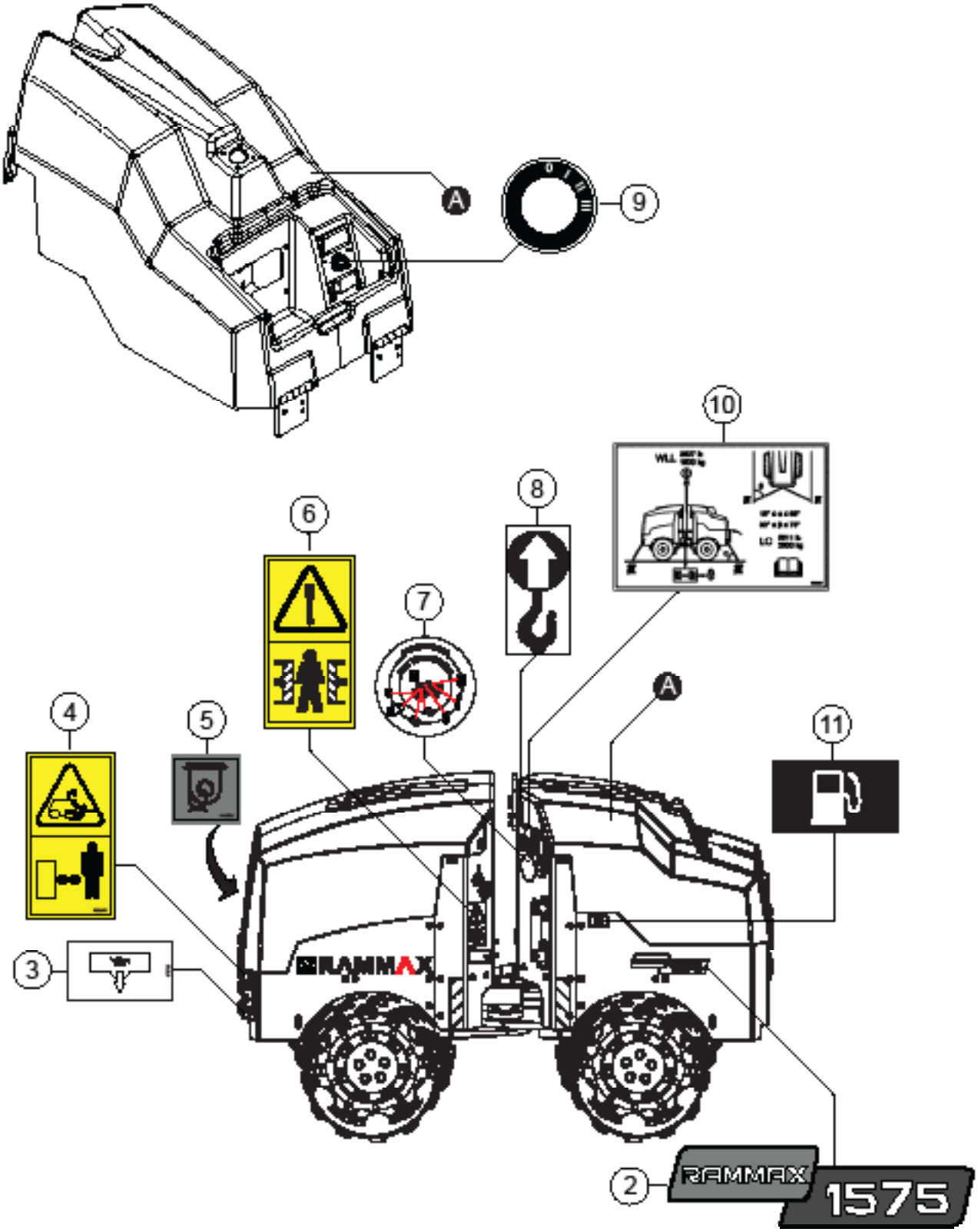
A
9
10
8
6
7
4
5
A
11
3
RAMMAX
2
RAMMAX
1575

NO.	PART NO.	PART NAME	QTY.	REMARKS
2	1231056	DECAL, RAMMAX 1575	1	
3	1-473756	DECAL, OIL DRAIN	1	
4	1232648	DECAL, WARNING	3	
5	1155236	DECAL, TIE DOWN HOOK	1	
6	1191374	DECAL, WARNING CRUSH HAZARD	1	
7	124441	DECAL, FILTER KITS	1	
8	1-410988	DECAL, LIFTING HOOK	1	
9	1232992	DECAL, STARTING POSITION RING	1	
10	1233029	DECAL, ARTICULATION INFORMATION	1	
11	1-478679	DECAL, DIESEL FUEL	1	

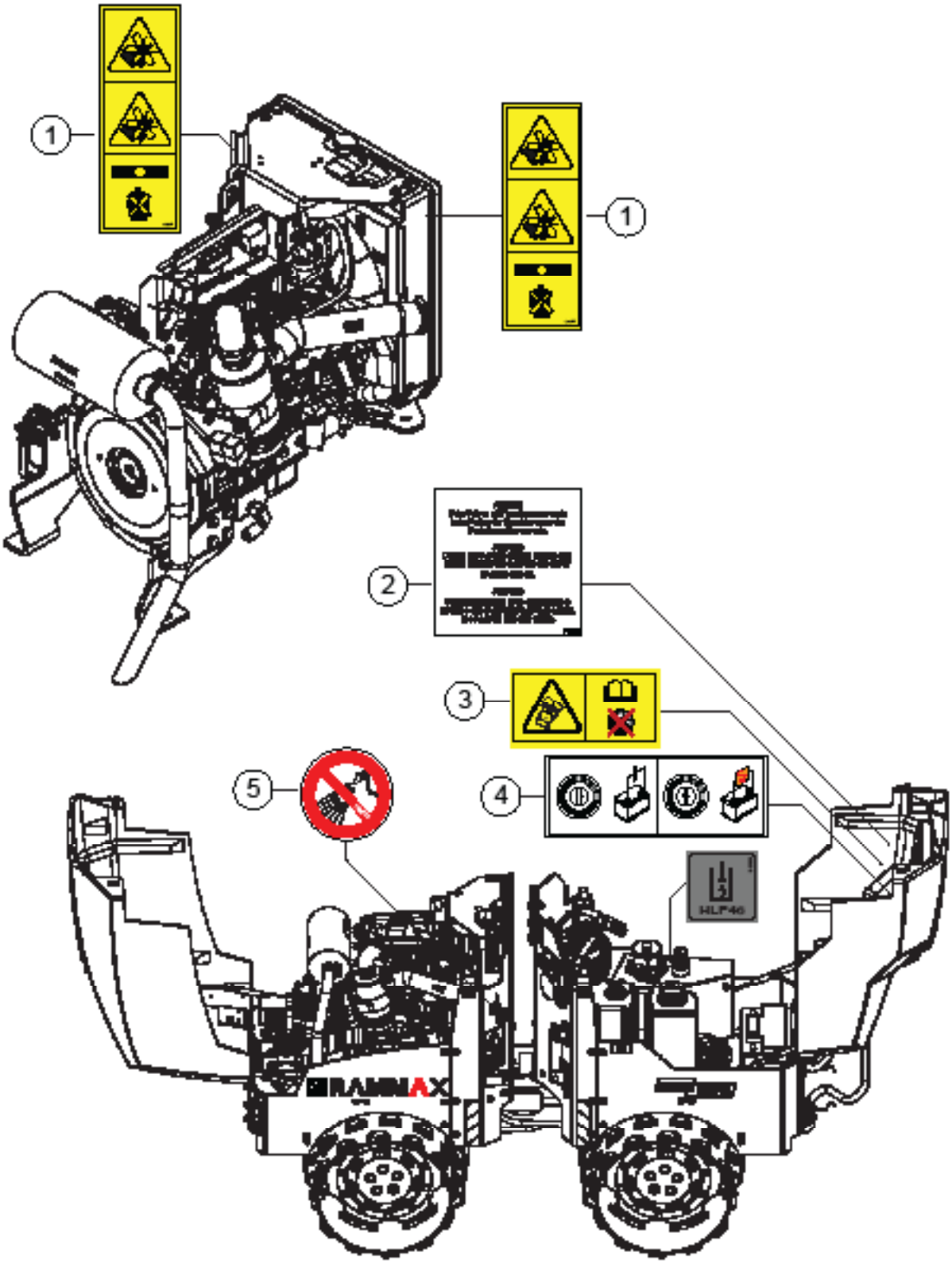
1
1
2
3
4
5
HLF46
RAMMAX

NO.	PART NO.	PART NAME	QTY.	REMARKS
1	1212577	DECAL, ROTATING BLADE HAZARD	2	
2	3-39672	DECAL, ATTENTION DRIVING W/ REMOTE	2	
3	1244596	DECAL, WARNING, INFORMATION	1	
4	1233394	DECAL, BATTERY/STARTING INFORMATION	1	
5	1195755	DECAL, NO WATER SPRAY	1	

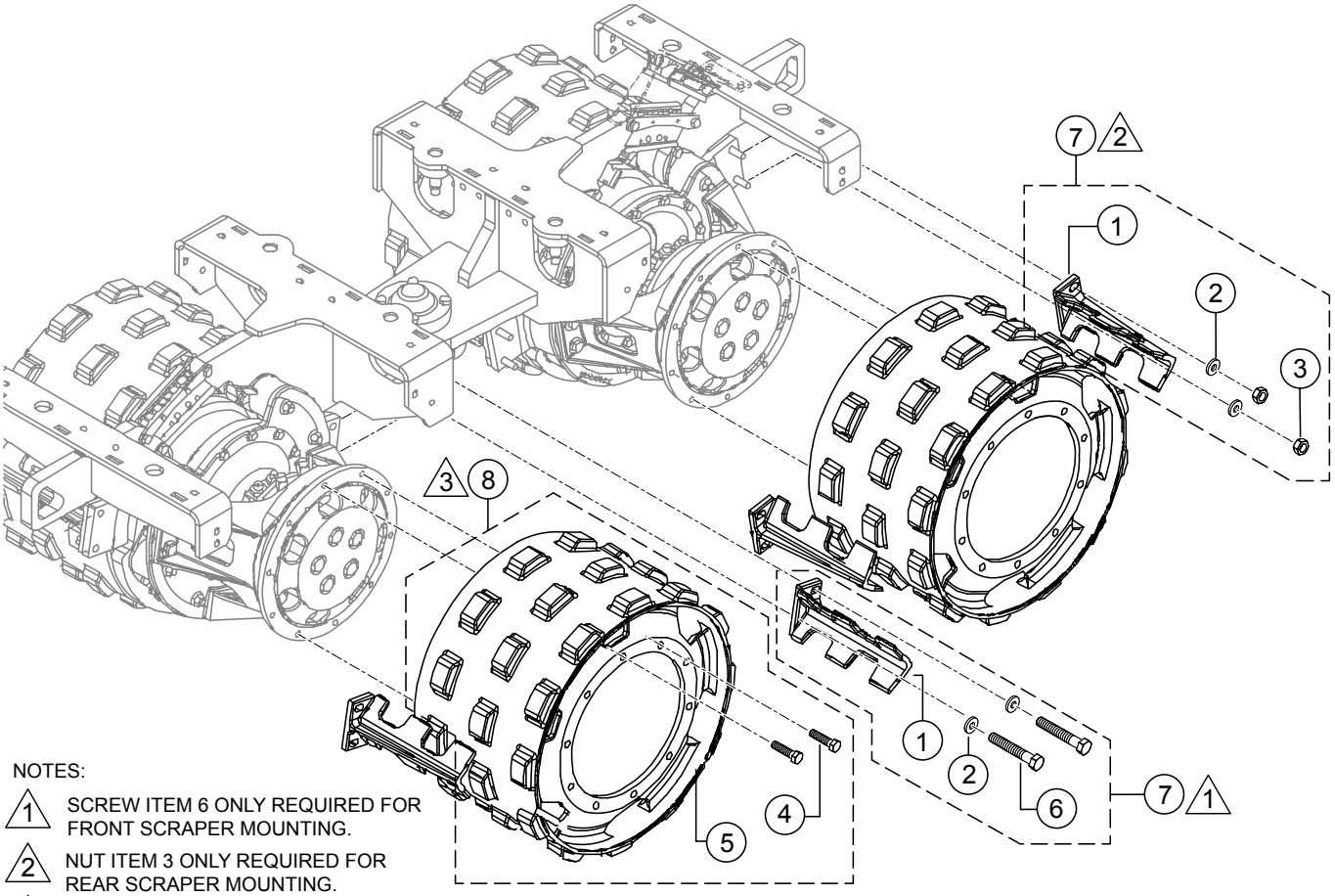

NOTES:

1. SCREW ITEM 6 ONLY REQUIRED FOR FRONT SCRAPER MOUNTING.
2. NUT ITEM 3 ONLY REQUIRED FOR REAR SCRAPER MOUNTING.
3. MOUNTING HARDWARE IS THE SAME FOR ALL FOUR DRUMS.

NO.	PART NO.	PART NAME	QTY.	REMARKS
1#	1247173	SCRAPER, 24 IN./640 MM	8	
1#	1247172	SCRAPER, 33 IN./850 MM	8	
2#	J902287	WASHER	16	
3#	J902126	HEX. NUT	8	
4%	J901782	HEX. HEAD SCREW	40	
5%	1216887	DRUM, 24 IN./640 MM	4	
5%	1216809	DRUM, 33 IN./850 MM	4	
6#	J901787	HEX. HEAD SCREW	8	USED ON FRONT SCRAPER ONLY
7	1246814	KIT, SCRAPER MOUNTING	1	INCLUDES ITEMS W/#
8	1246815	KIT, DRUM	1	INCLUDES ITEMS W/%

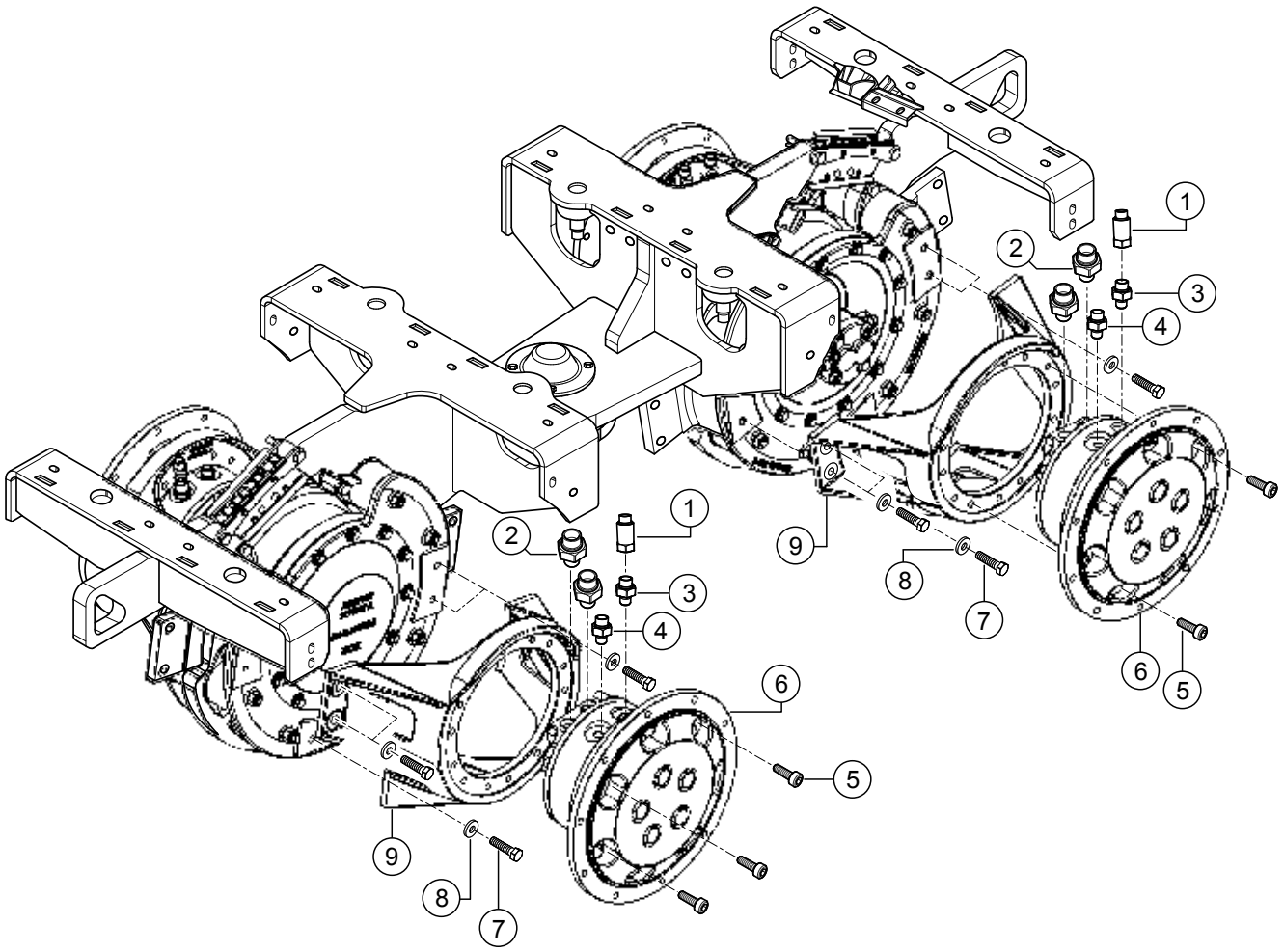
1
2
3
4
5
6
7
8
9

NO.	PART NO.	PART NAME	QTY.	REMARKS
1	1250593	SCREWED CONNECTION	6	
2	1204949	MALE STUD COUPLING BODY	8	
3	1193331	MALE STUD COUPLING BODY	4	
4	1183844	MALE STUD COUPLING BODY	4	
5	1-902651	SOCKET HEAD CAP SCREW	28	
6	1217513	FLUID, MOTOR	4	
7	J901783	HEX. HEAD SCREW	24	
8	J902387	STRAIN WASHER	24	
9	1216766	MOTOR SUPPORT	4	

VIBRATION ASSY.

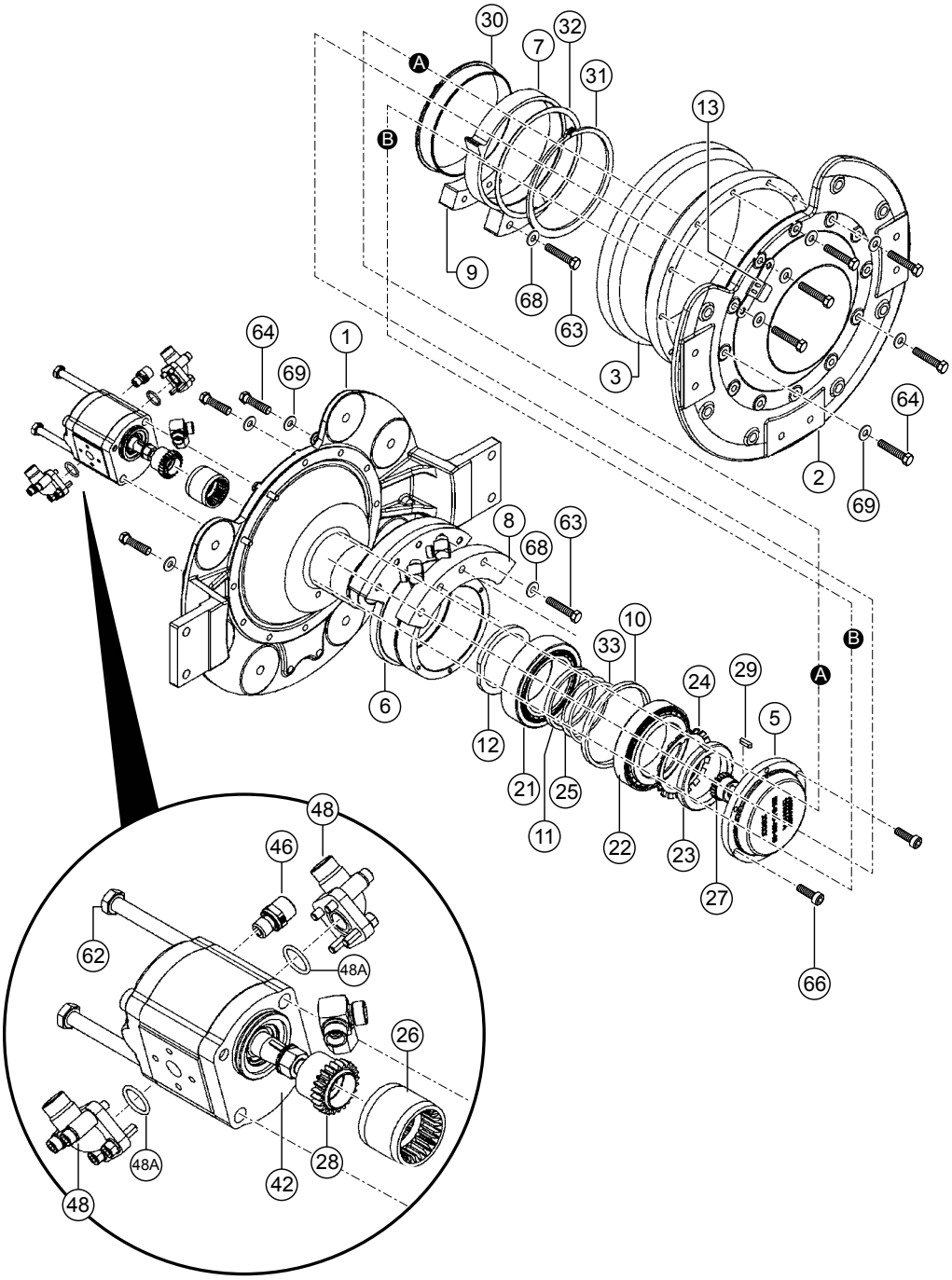

NO.	PART NO.	PART NAME	QTY.	REMARKS
1	1216577	SUPPORT	1	
2	1216661	COVER	1	
3	1217651	SPACER PIPE	1	
5	1216419	BEARING COVER	1	
6	1216436	UNBALANCED MASS	1	
7	1217372	TRANSFER WEIGHT	1	
8	1217528	UNBALANCED MASS	1	
9	1217555	UNBALANCED MASS	1	
10	1217187	SPACER RING	1	
11	1217200	SPACER RING	1	
12	1217186	SPACER RING	1	
13	1251017	HOLDING PLATE	1	
21	1216944	TAPERED ROLLER BEARING	1	
22	1216948	TAPERED ROLLER BEARING	1	
23	J920193	GROOVE NUT	1	
24	1217014	SECURING PLATE	1	
25	1218344	SPACER RING	5	
26	1217047	COUPLING SLEEVE	1	
27	1217091	HUB	1	
28	1217049	HUB	1	
29	1-903813	FEATHER KEY	1	
30	1217043	PLAIN BEARING BUSHING	1	
31	1-903549	CIRCLIP	1	
32	1239140	SPACER	1	
33	1260479	SPACER	1	
42	1216418	GEAR MOTOR	1	
46	1182701	MALE STUD COUPLING BODY	1	
48	57644	ANGLE FLANGE	2	
48A	62039	O-RING	1	
62	1236079	HEX. HEAD SCREW	2	
63	H0105624	HEX. HEAD SCREW	7	
64	H77284445	HEX. HEAD SCREW	24	
66	J902634	SOCKET HEAD CAP SCREW	6	
68	1902386	STRAIN WASHER	7	
69	1908693	STRAIN WASHER	24	

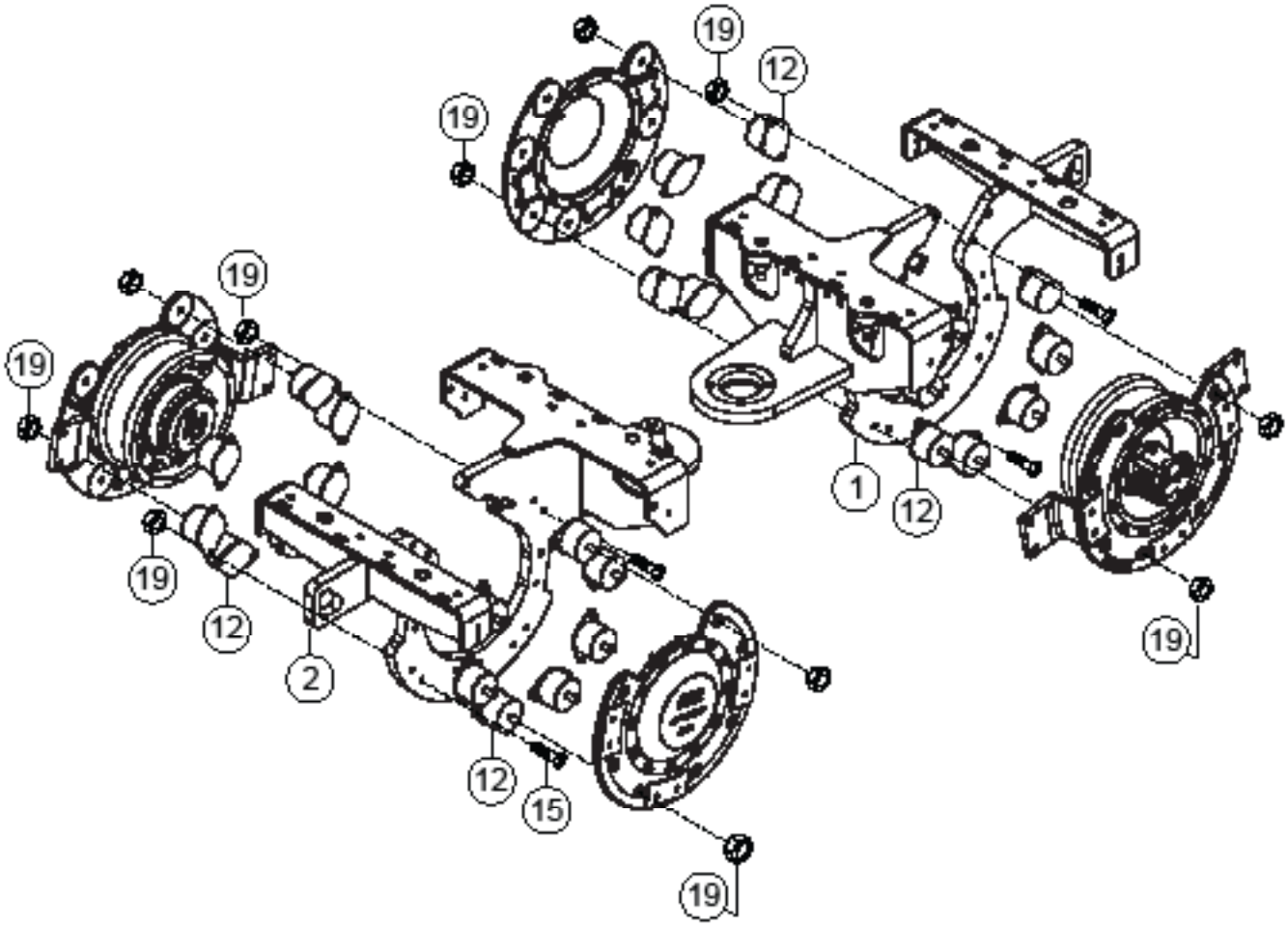
19
12
19
19
19
1
12
19
12
2
12
15
19

CENTER BEAM ASSY.

NO.	PART NO.	PART NAME	QTY.	REMARKS
1	1225762	CENTER BEAM	1	
2	1225774	CENTER BEAM, REAR	1	
12	1217092	RUBBER CUSHION	28	
15	H0105624	HEX. HEAD SCREW	28	
19	J902125	HEX. NUT	50	

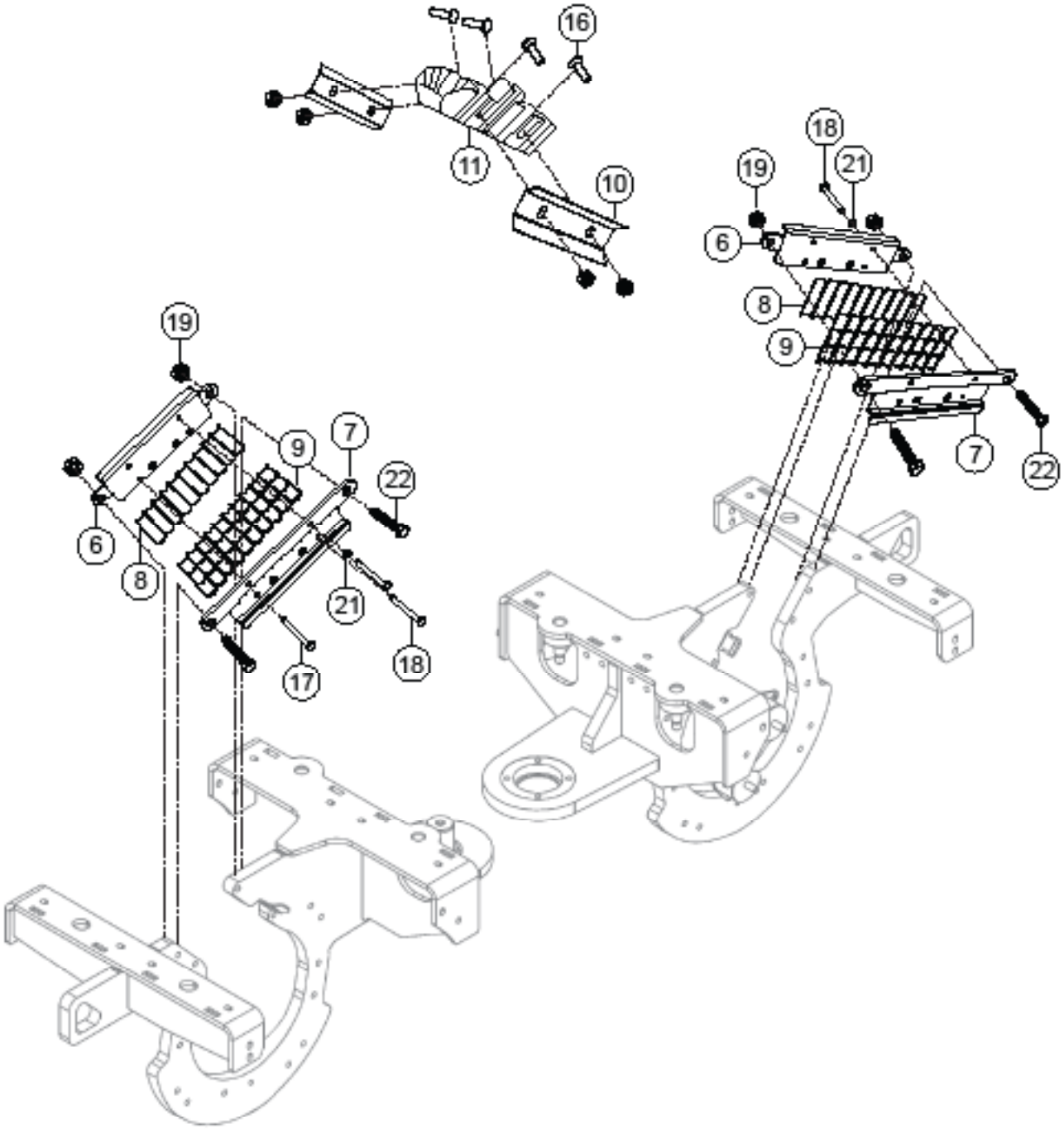
16
11
10
18
19
21
6
8
9
7
22
19
9
7
22
6
8
21
18
17

NO.	PART NO.	PART NAME	QTY.	REMARKS
6	1248133	HOSE GUIDE	2	
7	1236573	HOSE GUIDE	2	
8	1235441	HOSE GUIDE	2	
9	1235442	HOSE GUIDE	2	
10	1225564	CLAMPLING PLATE	2	
11	1235443	HOSE GUIDE	1	
16	J902525	TRUSS HEAD SCREW	4	
17	1-921816	HEX. HEAD SCREW	4	
18	1225694	HEX. HEAD SCREW	4	
19	J902125	HEX. NUT	50	
21	J902260	WASHER	8	
22	H0040591	HEX. HEAD SCREW	4	

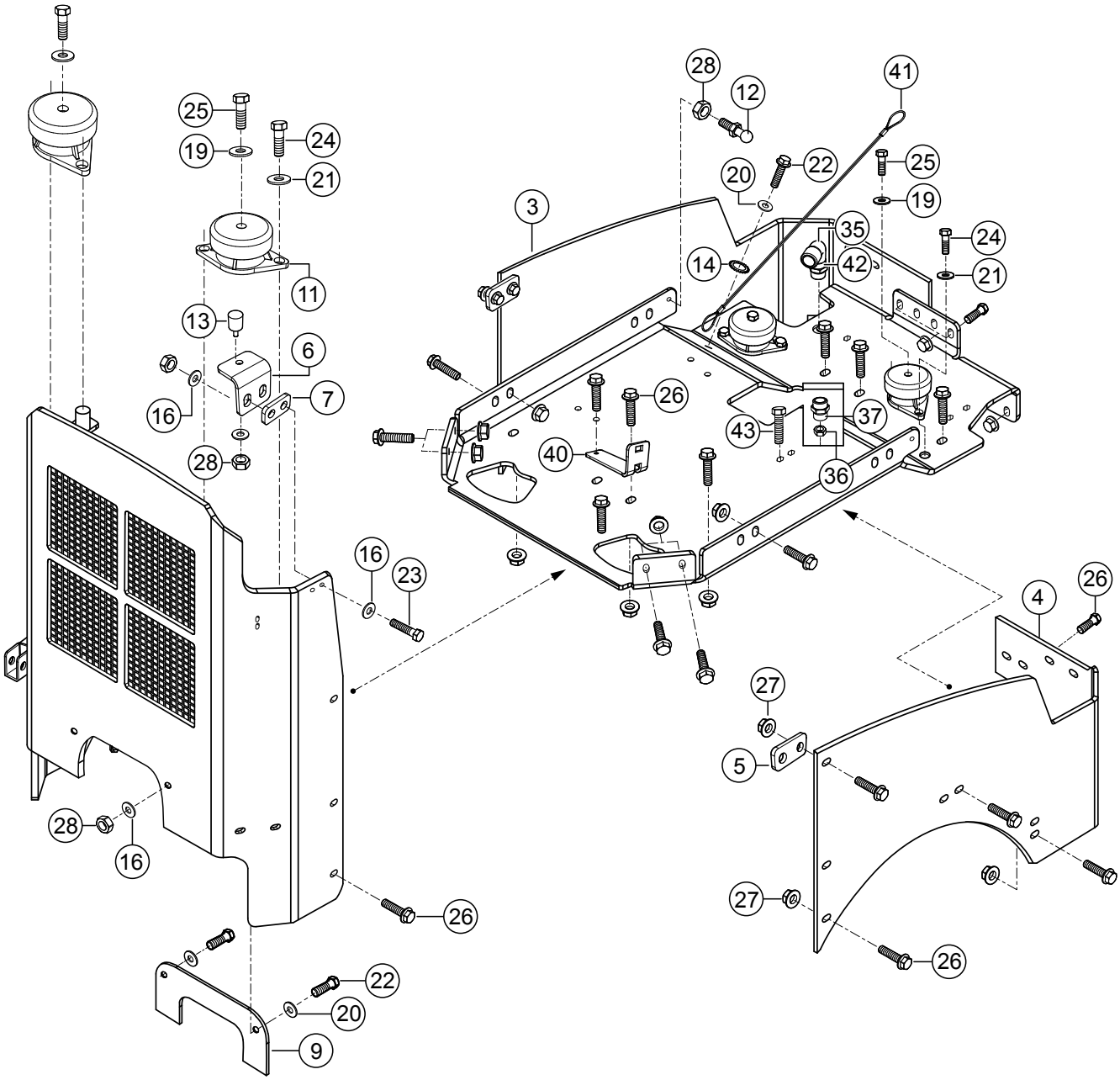
28
12
41
25
24
19
21
22
20
25
19
3
35
24
14
42
21
11
13
6
7
16
26
37
43
40
36
28
16
23
26
4
27
5
28
16
26
27
26
22
20
9

NO.	PART NO.	PART NAME	QTY.	REMARKS
3	1225771	SIDE PLATE	1	
4	1225770	SIDE PLATE	1	
5	1225768	HOLDING PLATE	2	
6	1225739	SUPPORT PLATE	2	
7	1225764	SPACER PLATE	2	
9	1225756	COVER	1	
11	1-491741	RUBBER MOUNT	4	
12	1-952972	BALL PIVOT	2	
13	1068503	BUMPER	2	
14	1-944415	SERRATED LOCK WASHER	1	
16	J902263	WASHER	12	
19	J902265	WASHER	4	
20	J902285	WASHER	3	
21	J902264	WASHER	8	
22	J901764	HEX. HEAD SCREW	3	
23	H0062345	HEX. HEAD SCREW	4	
24	J901775	HEX. HEAD SCREW	8	
25	J901782	HEX. HEAD SCREW	4	
26	1218260	HEX. HEAD SCREW	40	
27	1184584	HEX. NUT	40	
28	J902124	HEX. NUT	10	
35	1-901447	BULKHEAD ELBOW NIPPLE	1	
36	1-901003	UNION NUT	1	
37	1-901276	SEALING PLUG	1	
40	1233172	HOLDER	1	
41	1242717	STAY ROPE	1	
42	J902303	WASHER	1	
43	J901768	HEX. HEAD SCREW	2	

CHASSIS REAR ASSY.

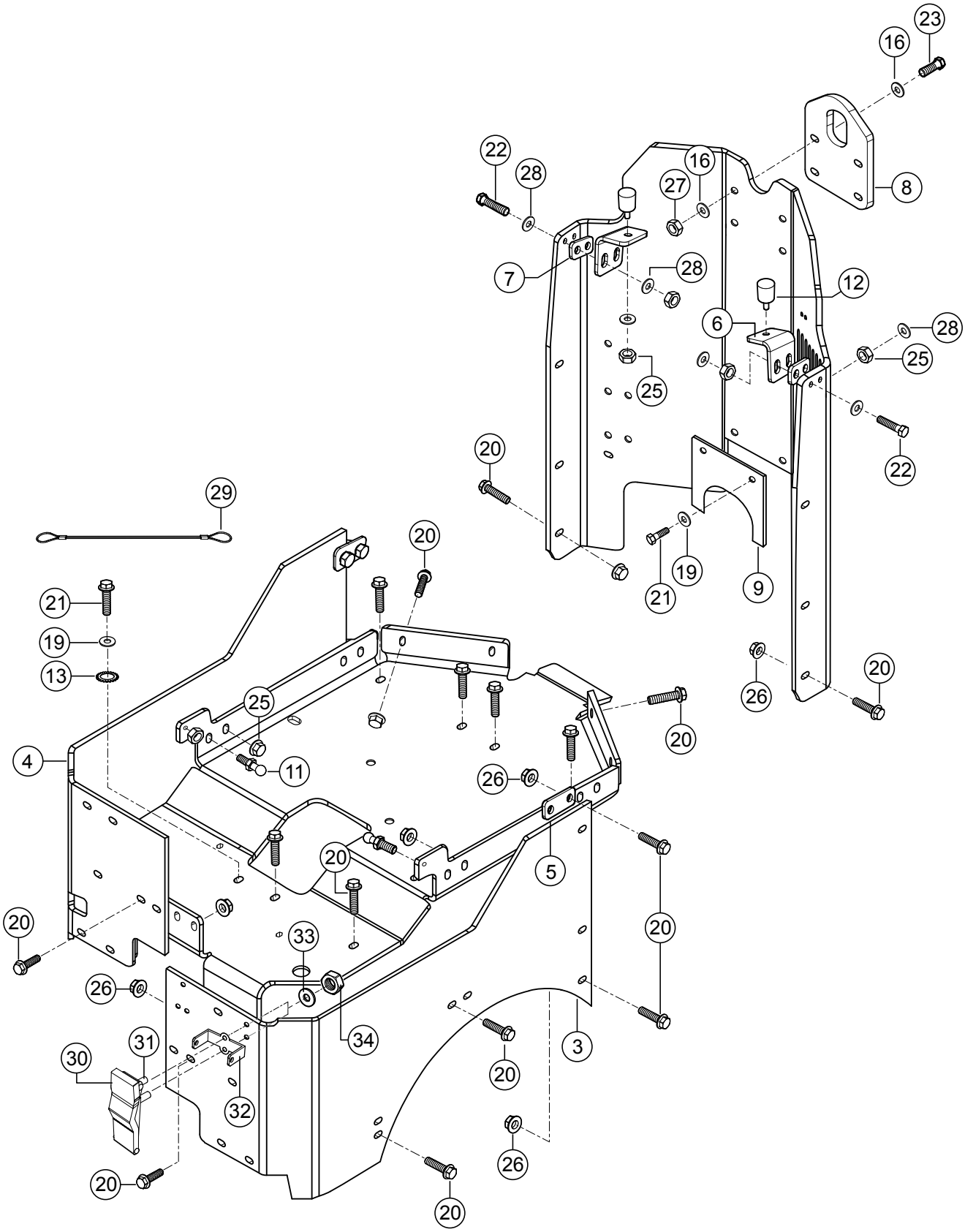

NO.	PART NO.	PART NAME	QTY.	REMARKS
3	1225802	SIDE PLATE	1	
4	1225803	SIDE PLATE	1	
5	1225768	HOLDING PLATE	2	
6	1225739	SUPPORT PLATE	2	
7	1225764	SPACER PLATE	2	
8	1226252	1-POINT SUSPENSION	1	
9	1225741	COVER	1	
11	1-952972	BALL PIVOT	2	
12	1068503	BUMPER	2	
13	1-944415	SERRATED LOCK WASHER	1	
16	1-902387	STRAIN WASHER	8	
19	J902285	WASHER	3	
20	1218260	HEX. HEAD SCREW	36	
21	J901764	HEX. HEAD SCREW	3	
22	H0062345	HEX. HEAD SCREW	4	
23	1185009	HEX. HEAD SCREW	4	
25	J902124	HEX. NUT	10	
26	1184584	HEX. NUT	36	
27	1185070	HEX. NUT	4	
28	J902263	WASHER	12	
29	1242717	STAY ROPE	1	
30	1-494880	BENT-LEVER CLOSURE	2	
31	J902631	SOCKET HEAD CAP SCREW	4	
32	1180778	STRIKING PLATE	2	
33	J902261	WASHER	4	
34	J902122	HEXAGON NUT	8	

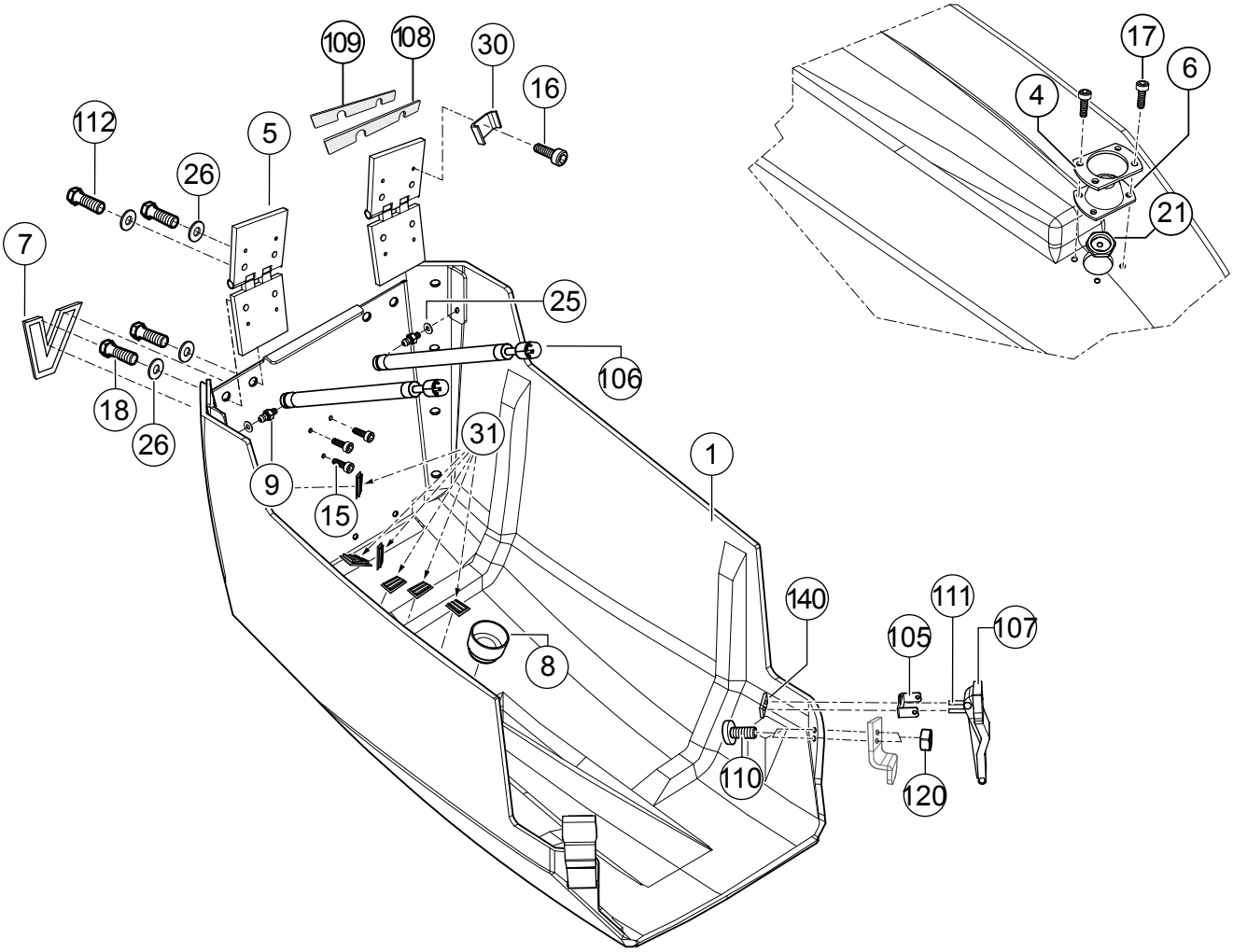
109
108
30
16
112
5
26
7
25
106
18
26
31
9
15
1
140
111
105
107
8
110
120
17
6
4
21

ENGINE HOOD ASSY.

NO.	PART NO.	PART NAME	QTY.	REMARK
1	1249286	ENGINE HOOD	1	
4	1241355	CLAMPING PLATE	1	
5	1225563	HINGE	2	
6	3-03778	PROTECTIVE CAP	1	
7	1178978	COMPANY LOGO	1	
8	1226285	SENSOR	1	
9	1-952972	BALL PIVOT	2	
15	1226372	OVAL HEAD SCREW	3	
16	1226478	SOCKET HEAD CAP SCREW	2	
17	1-902636	SOCKET HEAD CAP SCREW	4	
18	J901773	HEX. HEAD SCREW	4	
21	J917108	COUNTERNUT	1	
25	J902263	WASHER	2	
26	J902264	WASHER	8	
30	1201138	CABLE TIE ANCHOR	2	
31	J910527	ADHESIVE CLIP	6	
105	1180778	STRIKING PLATE	1	
106	1205428	GAS PRESSURE SPRING	2	
107	1-494880	BENT-LEVER CLOSURE	2	
108	1274069	SUPPORT PLATE	2	
109	1274090	SUPPORT PLATE	2	
110	1220542	OVAL HEAD SCREW	4	
111	J902631	SOCKET HEAD CAP SCREW	4	
112	H0040563	HEX. HEAD SCREW	4	
120	J902122	HEX. NUT	8	
140	1274064	PLATE RECTANGULAR	2	

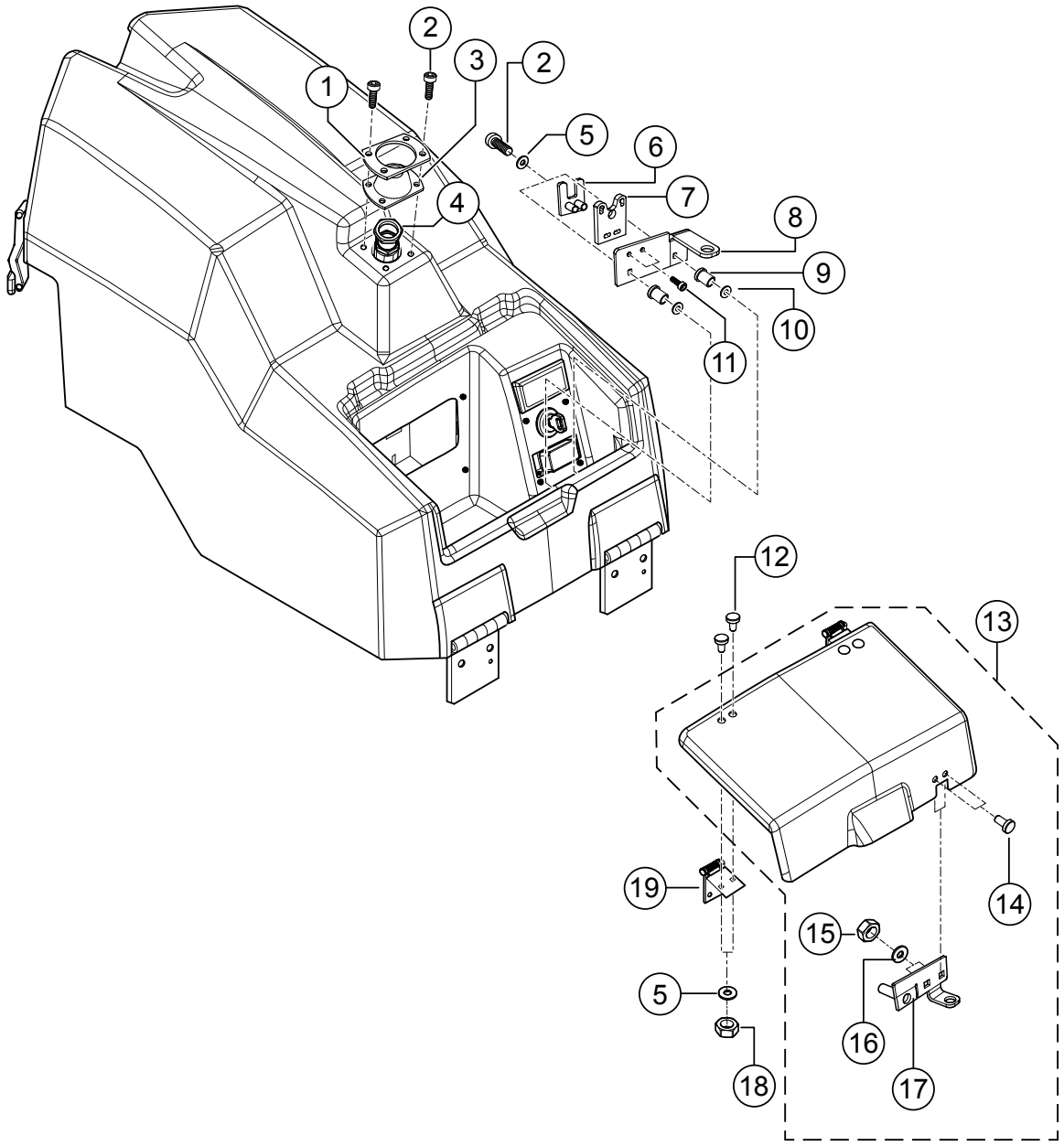
1
2
3
2
5
6
7
4
8
9
10
11
12
13
14
19
15
5
16
18
17

COVER HOOD TOP ASSY.

NO.	PART NO.	PART NAME	QTY.	REMARKS
1	1241355	CLAMPING PLATE	1	
2	1-902636	SOCKET HEAD CAP SCREW	6	
3	3-03778	PROTECTIVE CAP	1	
4	J917108	COUNTERNUT	1	
5	J902262	WASHER	6	
6	3-10921	CLAMPING PLATE	1	
7	3-10884	DETENT	1	
8	1225656	STRIKING PLATE	1	
9	1201190	BLIND RIVET NUT	2	
10	J902265	WASHER	2	
11	1-948204	SOCKET HEAD CAP SCREW	6	
12	1-922658	TRUSS HEAD SCREW	4	
13	1225594	COCKPIT COVER	1	INCLUDES ITEMS W/$
14$	1-922658	TRUSS HEAD SCREW	2	
15$	J902123	HEX. NUT	2	
16$	J902262	WASHER	2	
17$	1225566	LOCKING CAP	1	
18	J902123	HEX. NUT	4	
19	1225235	HINGE	2	

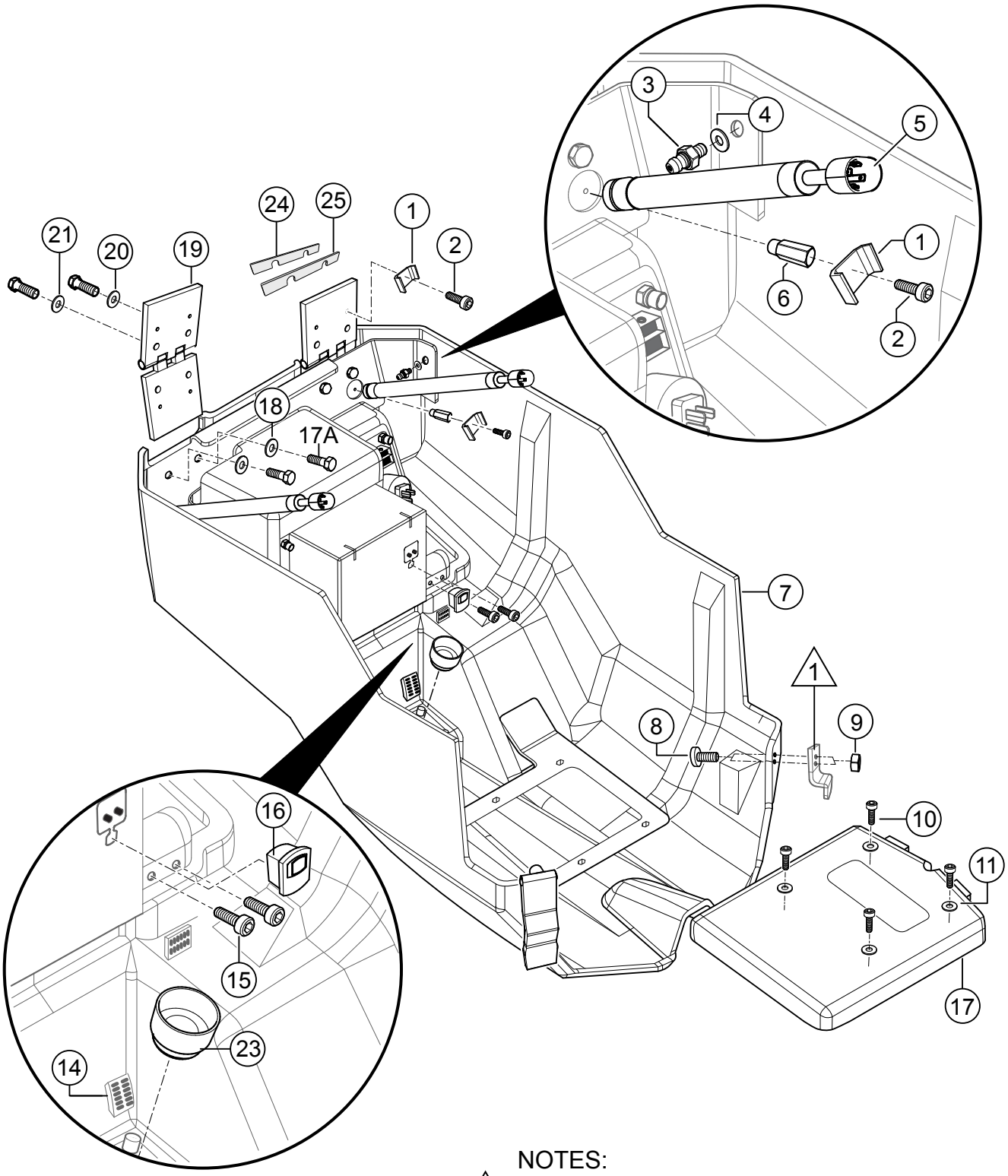

NOTES:

1 REFER TO CHASSIS REAR ITEM# 30.

COVER HOOD BOTTOM ASSY.

NO.	PART NO.	PART NAME	QTY.	REMARKS
1	1201138	CABLE TIE ANCHOR	2	
2	1226478	SOCKET HEAD CAP SCREW	2	
3	1-952972	BALL PIVOT	2	
4	J902263	WASHER	2	
5	1205428	GAS PRESSURE SPRING	2	
6	1-950215	SPACER	1	
7	1249287	COVER HOOD	1	
8	1220542	OVAL HEAD SCREW	4	
9	J902122	HEX. NUT	8	
10	1-948204	SOCKET HEAD CAP SCREW	6	
11	J902284	WASHER	4	
14	J910527	ADHESIVE CLIP	6	
15	1226372	OVAL HEAD SCREW	3	
16	1242334	STRAIN RELIEF	1	
17	1180399	DOCUMENT BOX	1	
17A	J901773	HEX HEAD SCREW	4	
18	J902264	WASHER	8	
19	1225563	HINGE	2	
20	J902264	WASHER	8	
21	H0040563	HEX HEAD SCREW	4	
23	1226285	SENSOR	1	
24	1274069	SUPPORT PLATE	2	
25	1274090	SUPPORT PLATE	2	

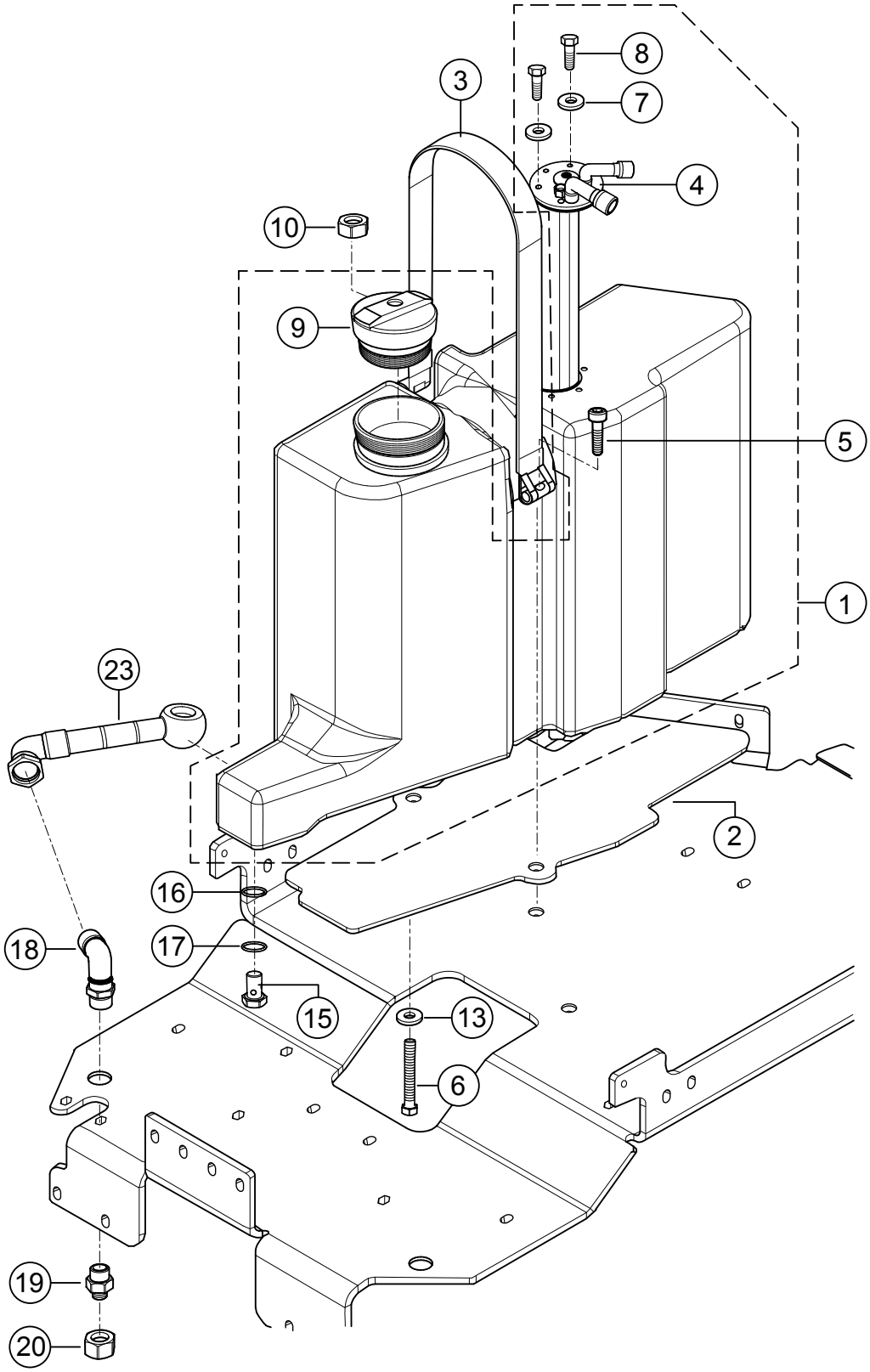
8
7
3
4
10
9
5
1
23
2
16
18
17
15
13
6
19
20

NO.	PART NO.	PART NAME	QTY.	REMARKS
1	1226760	FUEL TANK	1	INCLUDES ITEMS W/#
2	1226863	RUBBER MAT	1	
3	1226763	TENSIONING STRAP	1	
4#	1242221	TANK SENSOR	1	
5#	J902649	SOCKET HEAD CAP SCREW	1	
6	H0063266	HEX. HEAD SCREW	1	
7#	J902260	WASHER	6	
8#	1-922643	HEX. HEAD SCREW	6	
9#	1178986	FUEL FILLER CAP	1	
10	J902125	HEX. NUT	1	
13	J902264	WASHER	1	
15	1-954000	HOLLOW SCREW	1	
16	1-906645	O-RING	1	
17	1242196	SCREW SEAL	1	
18	1-901447	BULKHEAD ELBOW NIPPLE	1	
19	1-901276	SEALING PLUG	1	
20	1-901003	UNION NUT	1	
23	1233052	HYDRAULIC HOSE	1	

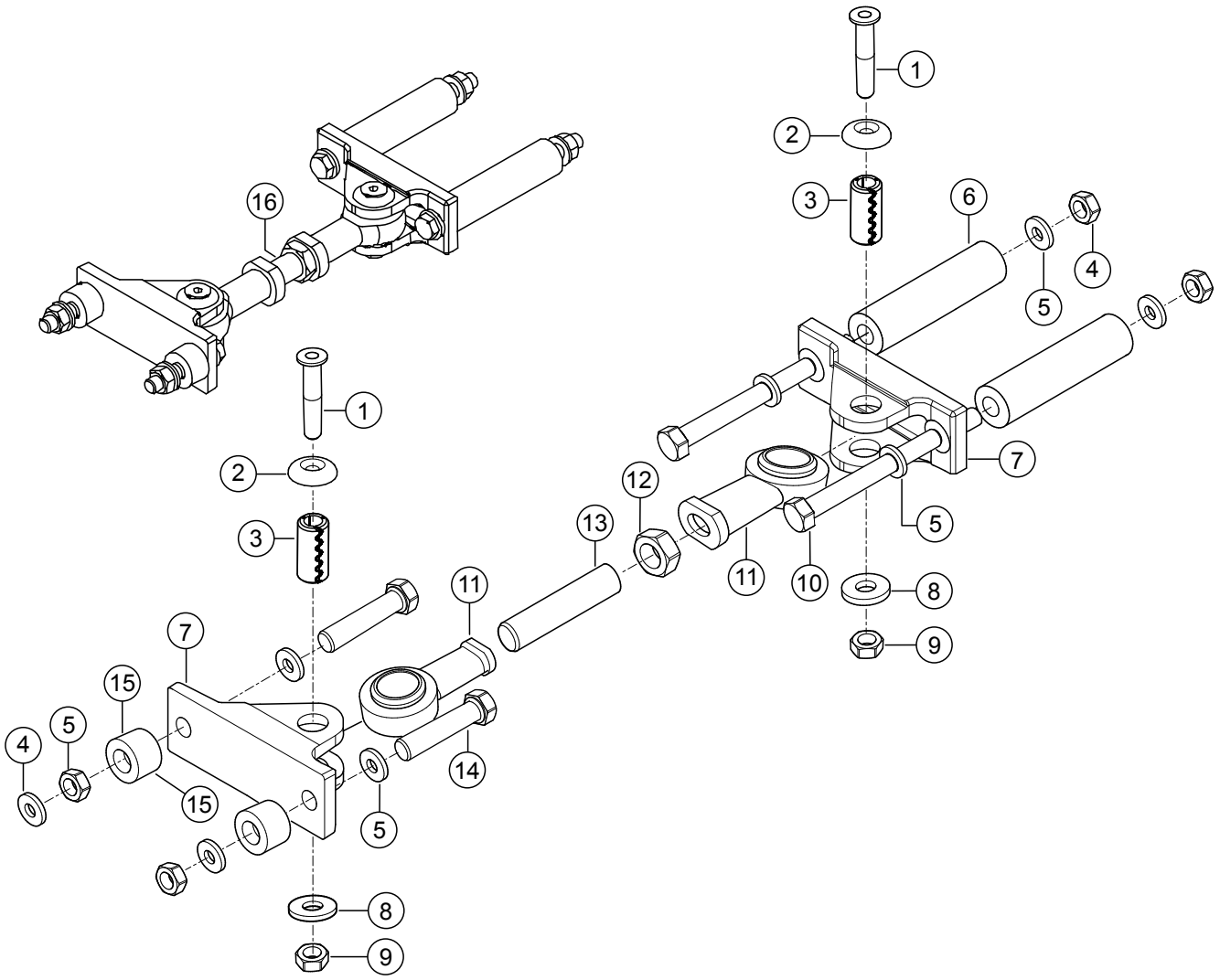
1
2
3
6
4
5
16
1
2
3
7
12
13
5
11
11
10
8
9
7
15
5
4
14
15
5
8
9

PENDULUM SUPPORT ASSY.

NO.	PART NO.	PART NAME	QTY.	REMARKS
1	J902988	COUNTERSUNK SCREW	2	
2	1036734	WASHER	2	
3	1059956	SPRING PIN	2	
4	J902126	HEX. NUT	4	
5	J902265	WASHER	8	
6	1225786	ROD W/DRILLED HOLE	2	
7	1059945	SUPPORT	2	
8	J902286	WASHER	2	
9	J902125	HEX. NUT	2	
10	J901791	HEX. HEAD SCREW	2	
11	J491255	JOINT HEAD	2	
12	J902183	HEX. NUT	1	
13	1225783	THREADED ROD	1	
14	1-952361	HEX. HEAD SCREW	2	
15	1225784	ROD W/DRILLED HOLE	2	
16	1225790	PENDULUM SUPPORT	1	

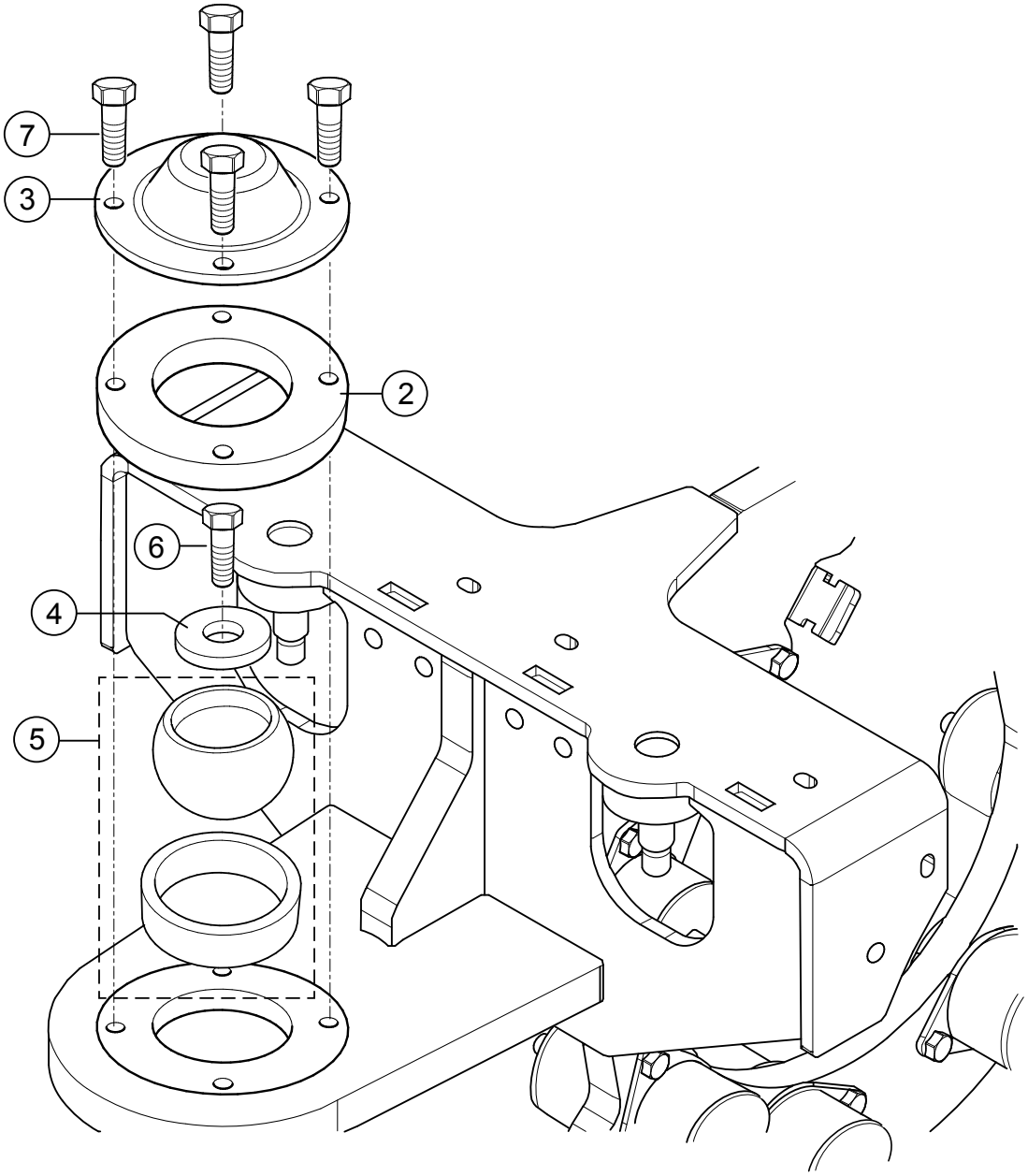
7
3
2
6
4
5

PENDULUM JOINT ASSY.

NO.	PART NO.	PART NAME	QTY.	REMARKS
2	1225667	CLAMP RING	1	
3	1175651	COVER	1	
4	1175656	ROD W/DRILLED HOLE	1	
5	1175657	PIVOT BEARING	1	2 PIECE SET
6	J901799	HEX. HEAD SCREW	1	
7	J901785	HEX. HEAD SCREW	4	

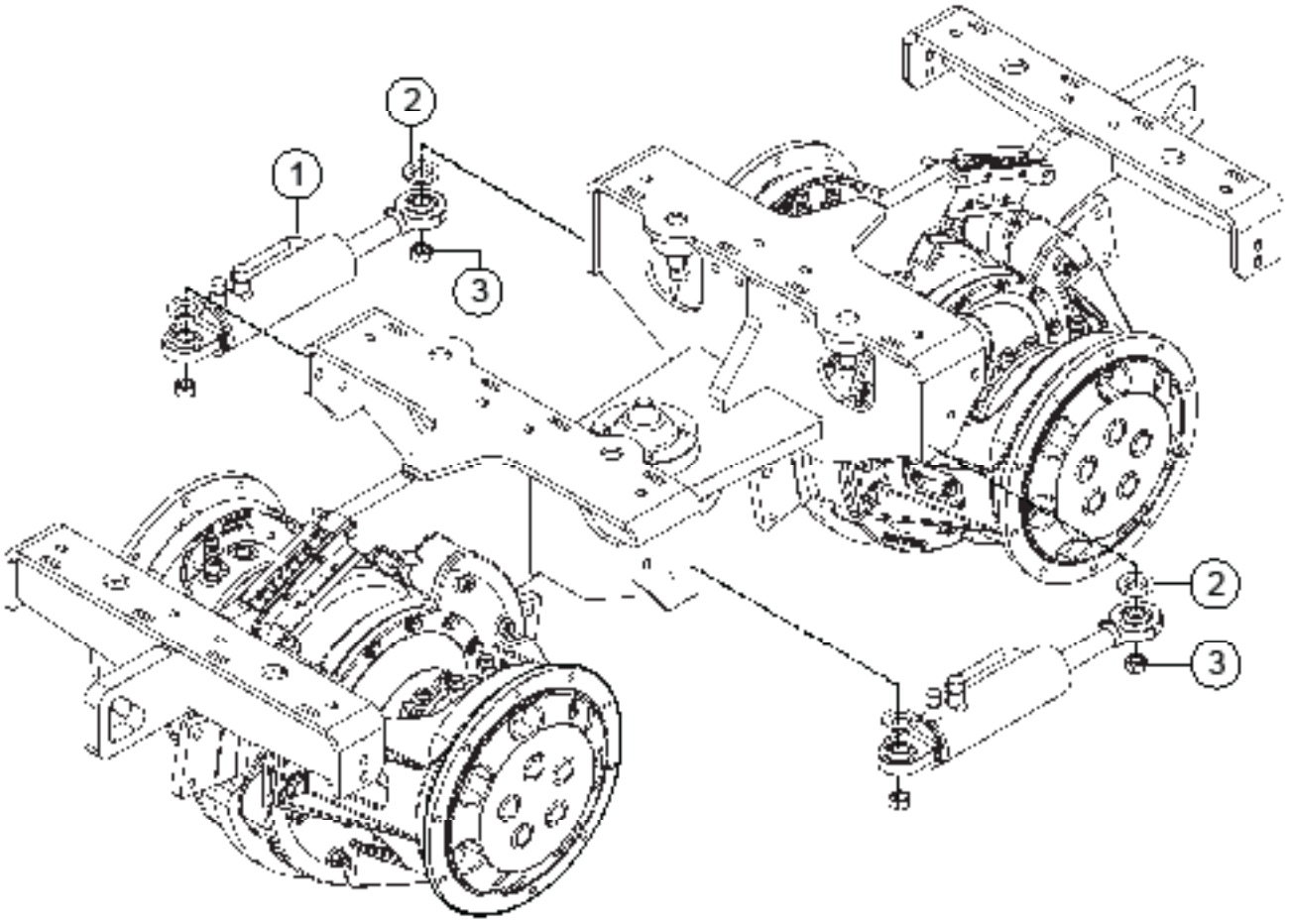
1
2
3
2
3

STEERING CYLINDER ASSY.

NO.	PART NO.	PART NAME	QTY.	REMARKS
1	1216415	STEERING CYLINDER	2	
2	1218875	SPACER	4	
3	J902128	HEX. NUT	4	

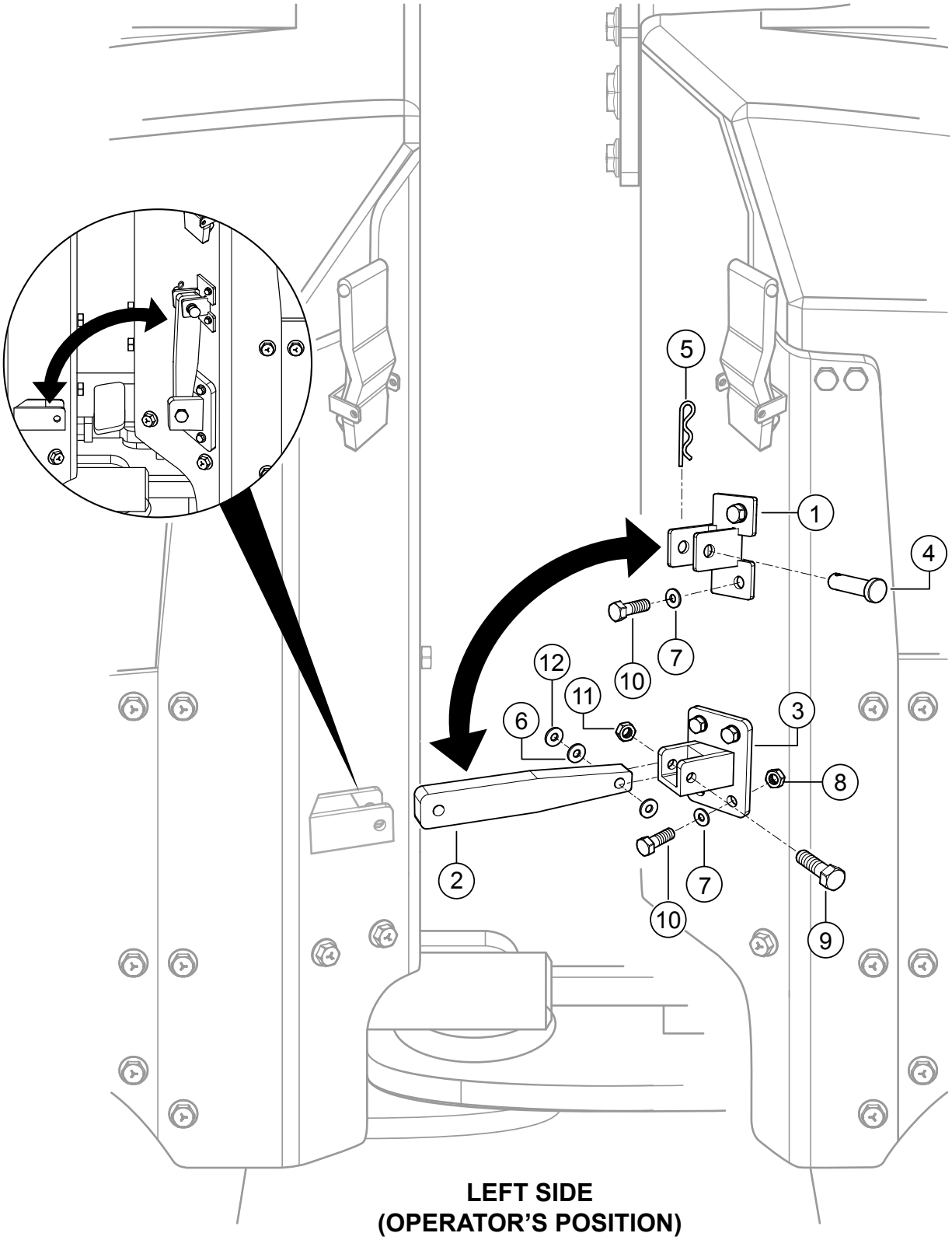

LEFT SIDE
(OPERATOR'S POSITION)

TRANSPORT SECURING DEVICE ASSY.

NO.	PART NO.	PART NAME	QTY.	REMARKS
1	1223200	FIXTURE	1	
2	1223249	LEVER	1	
3	1226569	ATTACHMENT	1	
4	1175452	BOLT	1	
5	1-952823	COTTER SPRING	1	
6	1240345	WASHER	2	
7	1-908693	STRAIN WASHER	12	
8	J902124	HEX. NUT	6	
9	J901872	HEX. HEAD SCREW	1	
10	J901862	HEX. HEAD SCREW	6	
11	J902125	HEX. NUT	1	
12	J902264	WASHER	1	

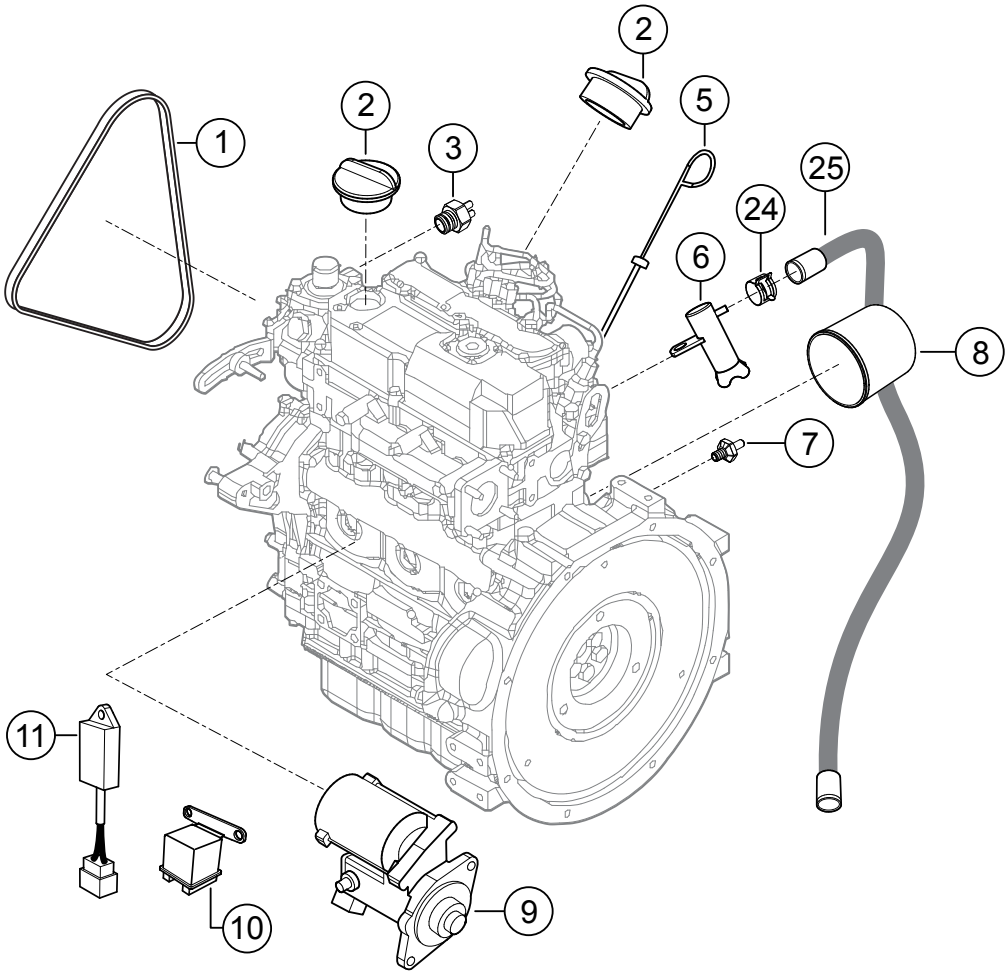
1
2
2
3
5
25
24
6
8
7
11
10
9

NO.	PART NO.	PART NAME	QTY.	REMARKS
1	1183743	V-BELT	1	
2	1-952341	LOCKING COVER	2	
3	1-952346	TEMPERATURE SWITCH	1	
5	1-954076	OIL DIPSTICK	1	
6	1-952402	THREE-WAY COCK	1	
7	1-952347	OIL PRESSURE SWITCH	1	
8	1-954075	ENGINE FILTER	1	
9	1-954079	STARTER	1	
10	1-952514	RELAY	1	
11	1-952515	TIME RELAY	1	
24	1181042	HOSE CLIP	4	
25	1-922332	HYDRAULIC HOSE, 0.63M L.	1	1 PC = 1M

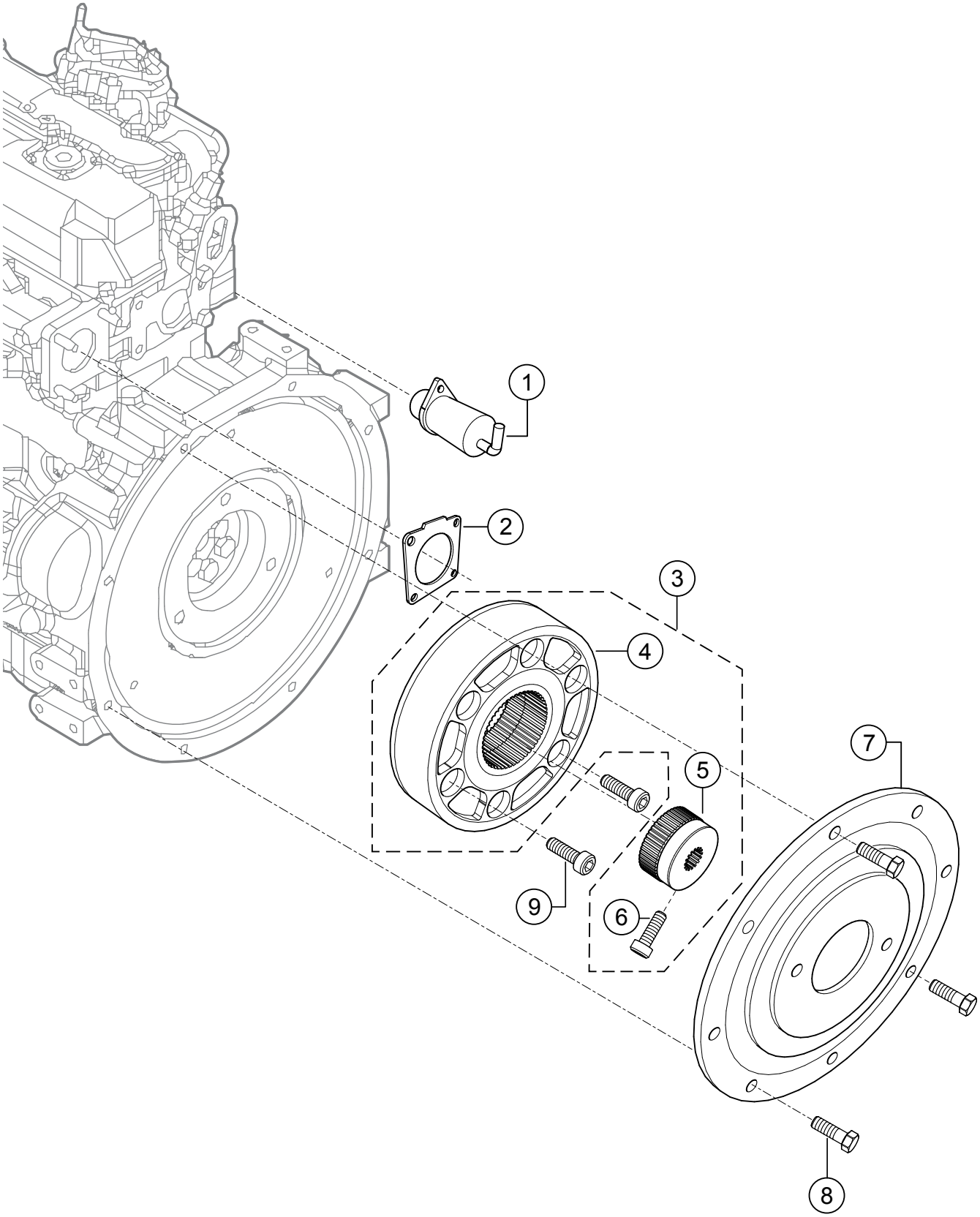
1
2
3
4
5
6
7
8
9

NO.	PART NO.	PART NAME	QTY.	REMARKS
1	1-954073	SWITCH-OFF VALVE	1	
2	1-953040	EXHAUST GASKET	1	
3	1-390538	CLUTCH	1	INCLUDES ITEMS W/%
4%	1-954007	FLANGE	1	
5%	1-954008	HUB	1	
6%	1-902647	SOCKET HEAD CAP SCREW	1	
7	1-390416	FLANGE	1	
8	H0040563	HEX. HEAD SCREW	20	
9	1-946180	SOCKET HEAD CAP SCREW	3	

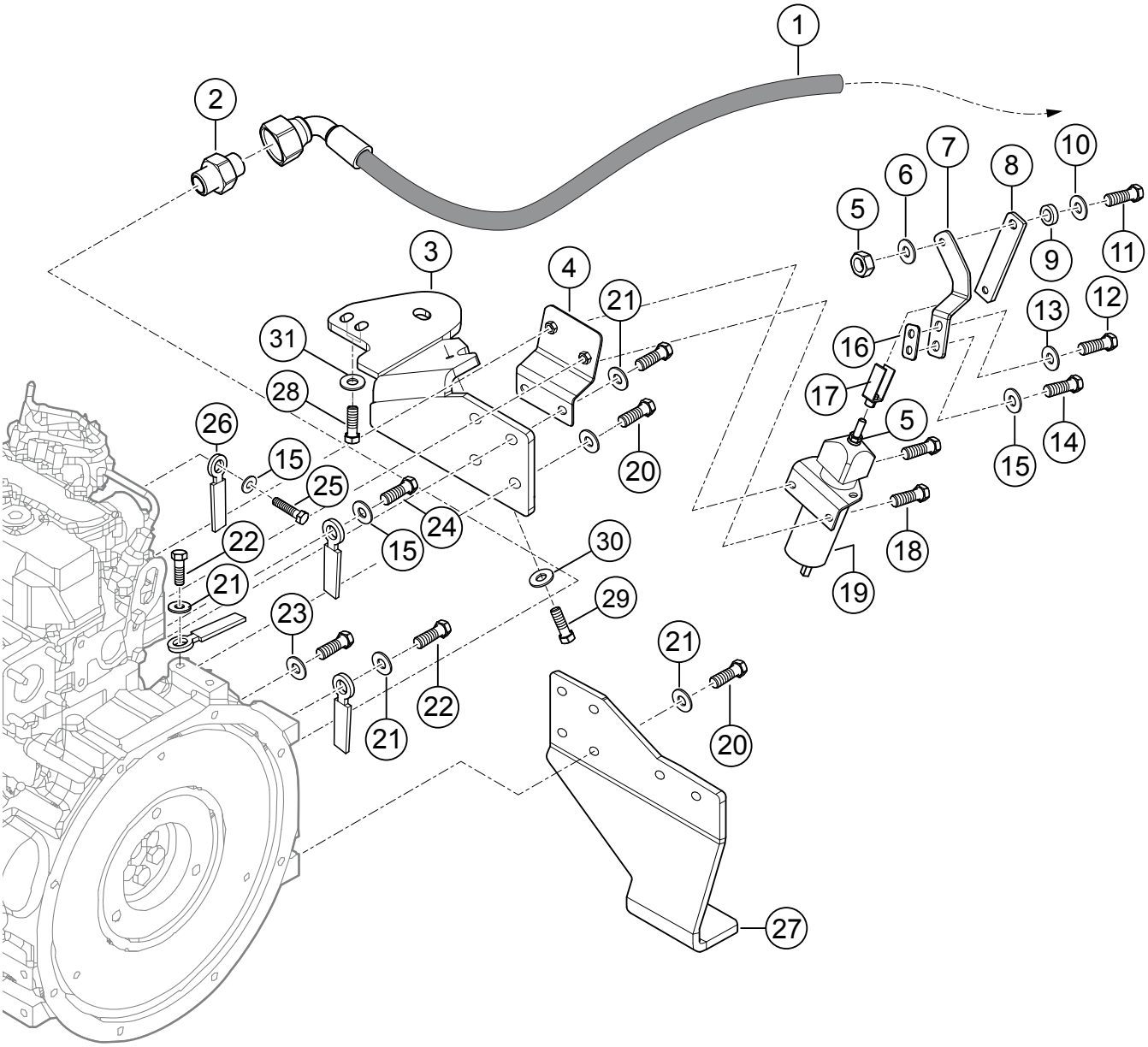
1
2
3
4
5
6
7
8
9
10
11
12
13
14
15
16
17
18
19
20
21
22
23
24
25
26
27
28
29
30
31

NO.	PART NO.	PART NAME	QTY.	REMARKS
1	1232768	HYDRAULIC HOSE	1	
2	1-953047	MALE STUD COUPLING BODY	1	
3	1226508	HOLDER	1	
4	1249891	HOLDING PLATE	1	
5	J902123	HEX. NUT	2	
6	J902284	WASHER	2	
7	1226526	LEVER	1	
8	1226551	INTERMEDIATE PIECE	1	
9	1226669	ROD W/DRILLED HOLE	1	
10	J902284	WASHER	2	
11	J901757	HEX. HEAD SCREW	1	
12	J901755	HEX. HEAD SCREW	3	
13	1952199	LOCK WASHER	3	
14	J901762	HEX. HEAD SCREW	3	
15	1-952116	LOCK WASHER	5	
16	1241767	THREADED PLATE	1	
17	J903646	FORK HEAD	1	
18	J902633	SOCKET HEAD CAP SCREW	2	
19	1226545	PULL MAGNET	1	
20	H0040563	HEX. HEAD SCREW	20	
21	1-952157	LOCK WASHER	18	
22	J901772	HEX. HEAD SCREW	4	
23	J902264	WASHER	1	
24	J901761	HEX. HEAD SCREW	1	
25	J901766	HEX. HEAD SCREW	1	
26	1-803707	CLAMP	4	
27	1226534	HOLDER	1	
28	J901764	HEX. HEAD SCREW	1	
29	J901762	HEX. HEAD SCREW	1	
30	J902263	WASHER	1	
31	1-952116	LOCK WASHER	4	

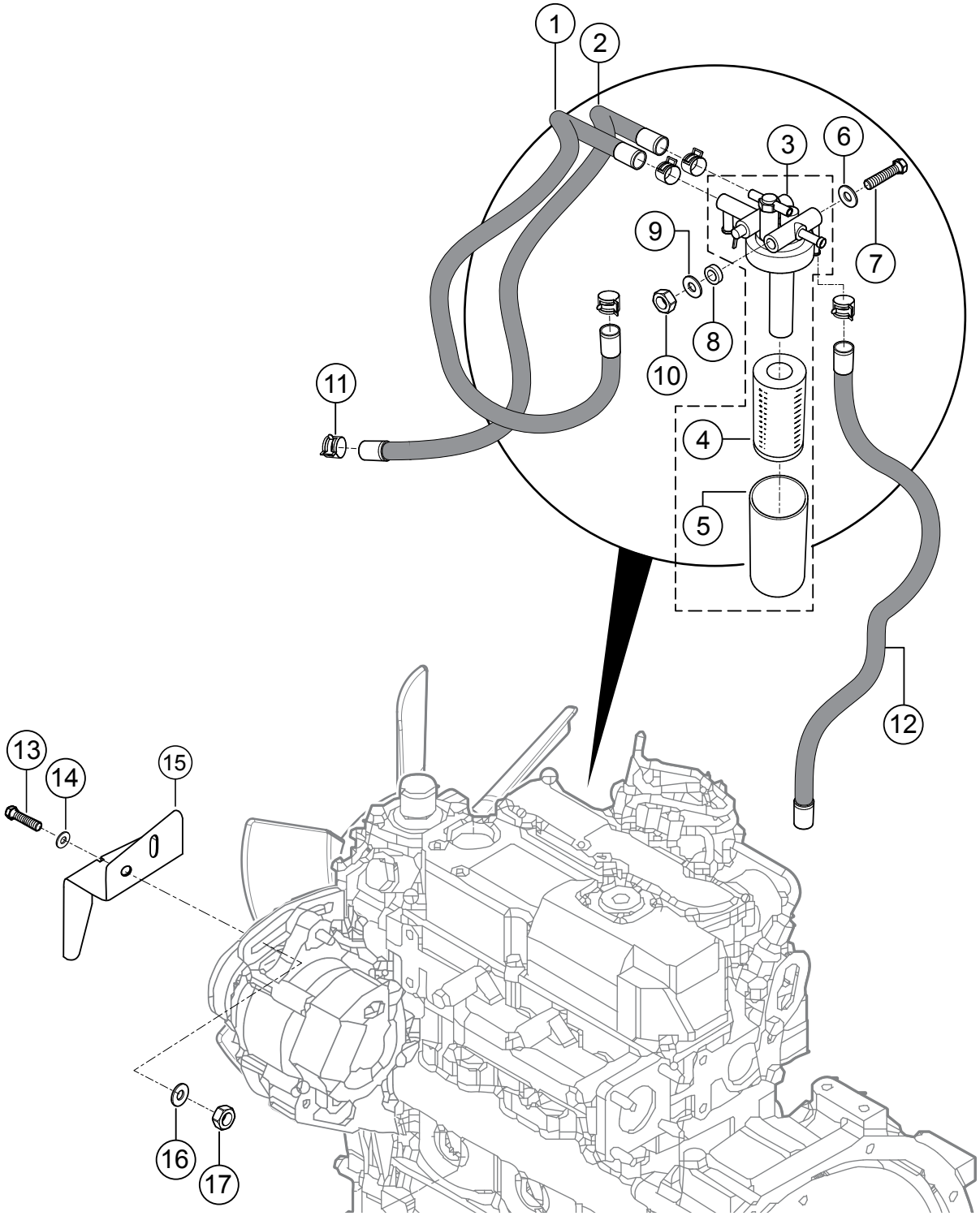
1
2
3
6
7
9
8
10
11
4
5
12
13
14
15
16
17

NO.	PART NO.	PART NAME	QTY.	REMARKS
1	1-922332	HYDRAULIC HOSE, 0.41M L.	1	1 PC = 1M
2	1-922332	HYDRAULIC HOSE, 0.28M L.	1	1 PC = 1M
3	1-954077	FUEL FILTER	1	INCLUDES ITEMS W/#
4#	1-954197	FILTER ELEMENT	1	
5#	1-954196	INSPECTION GLASS	1	
6	J902263	WASHER	2	
7	J901866	HEX. HEAD SCREW	2	
8	1-923622	WASHER	2	
9	1-952116	LOCK WASHER	5	
10	J902124	HEX. NUT	3	
11	1181042	HOSE CLIP	8	
12	1-922332	HYDRAULIC HOSE, 0.85M L.	1	1 PC = 1M
13	J901763	HEX. HEAD SCREW	1	
14	J902263	WASHER	2	
15	1077310	BELT GUARD	1	
16	J902285	WASHER	1	
17	J902124	HEX. NUT	3	

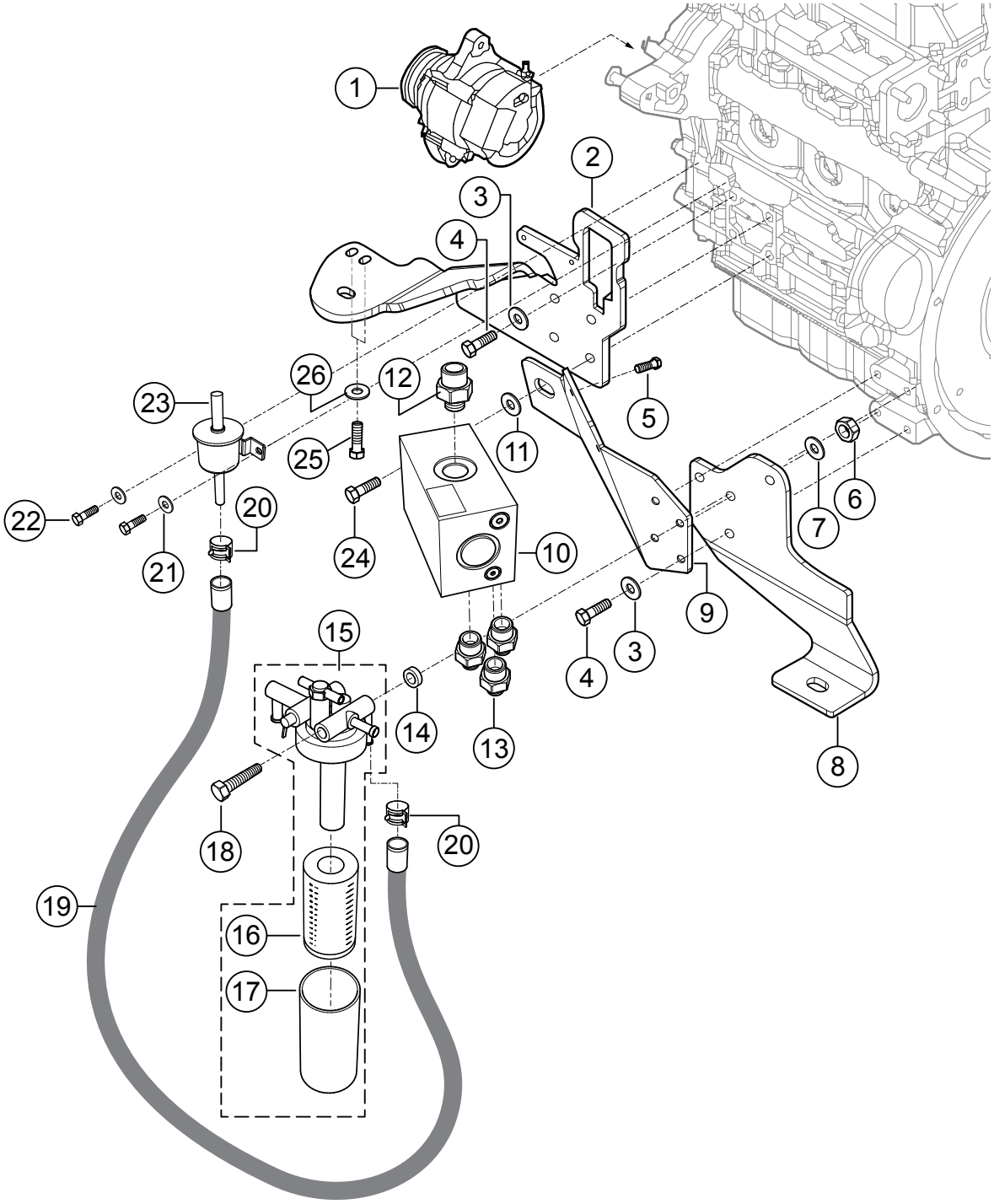
1
2
3
4
5
6
7
8
9
10
11
12
13
14
15
16
17
18
19
20
21
22
23
24
25
26

NO.	PART NO.	PART NAME	QTY.	REMARKS
1	1-954078	ALTERNATOR	1	
2	1226514	HOLDER	1	
3	1-952157	LOCK WASHER	18	
4	H0040563	HEX. HEAD SCREW	20	
5	J901762	HEX. HEAD SCREW	3	
6	J902124	HEX. NUT	3	
7	1-952116	LOCK WASHER	5	
8	1226519	HOLDER	1	
9	1140453	VOLUME DIVIDER HOLDER	1	
10	1216414	FLOW DIVIDER	1	
11	J902286	WASHER	1	
12	1-942784	MALE STUD COUPLING BODY	1	
13	1203988	MALE STUD COUPLING BODY	3	
14	1-923622	WASHER	2	
15	1-954077	FUEL FILTER	1	INCLUDES ITEMS W/#
16#	1-954197	FILTER ELEMENT	1	
17#	1-954196	INSPECTION GLASS	1	
18	J901866	HEX. HEAD SCREW	2	
19	1-922332	HYDRAULIC HOSE, 0.75M L.	1	1 PC = 1M
20	1181042	HOSE CLIP	8	
21	1-952199	LOCK WASHER	3	
22	J901755	HEX. HEAD SCREW	3	
23	1-952357	FUEL PUMP	1	
24	J901775	HEX. HEAD SCREW	1	
25	J901764	HEX. HEAD SCREW	2	
26	1-952116	LOCK WASHER	2	

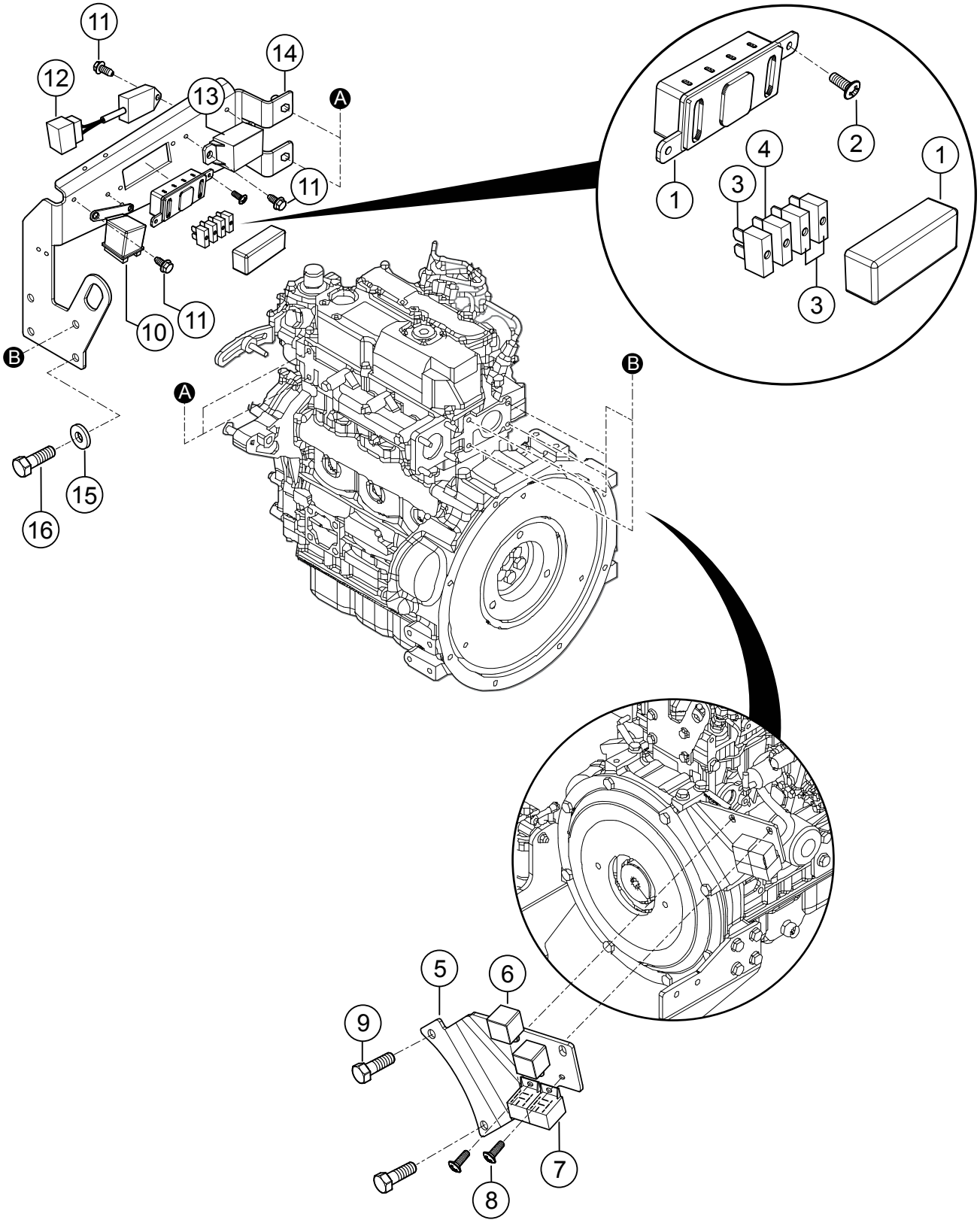
11
12
13
14
A
11
10
11
B
A
B
15
16
1
2
3
4
3
1
5
6
9
7
8

ENGINE ELECTRIC PARTS ASSY.

NO.	PART NO.	PART NAME	QTY.	REMARKS
1	1-831072	FUSE MODULE	1	
2	1-903683	BLIND RIVET	2	
3	1-944544	FUSE, 40 AMP	3	
4	1-921583	FUSE, 10 AMP	1	
5	1249894	HOLDER	1	
6	1227066	RELAY	2	
7	1206463	RELAY SUPPORT	2	
8	1220542	OVAL HEAD SCREW	2	
9	H0040563	HEX. HEAD SCREW	2	
10	1-952514	RELAY	1	
11	1-954810	HEX. HEAD SCREW	5	
12	1-952515	TIME RELAY	1	
13	1-493837	STARTING RELAY	1	
14	1249896	MOUNTING PLATE	1	
15	J901762	HEX. HEAD SCREW	4	
16	1-952116	LOCK WASHER	4	

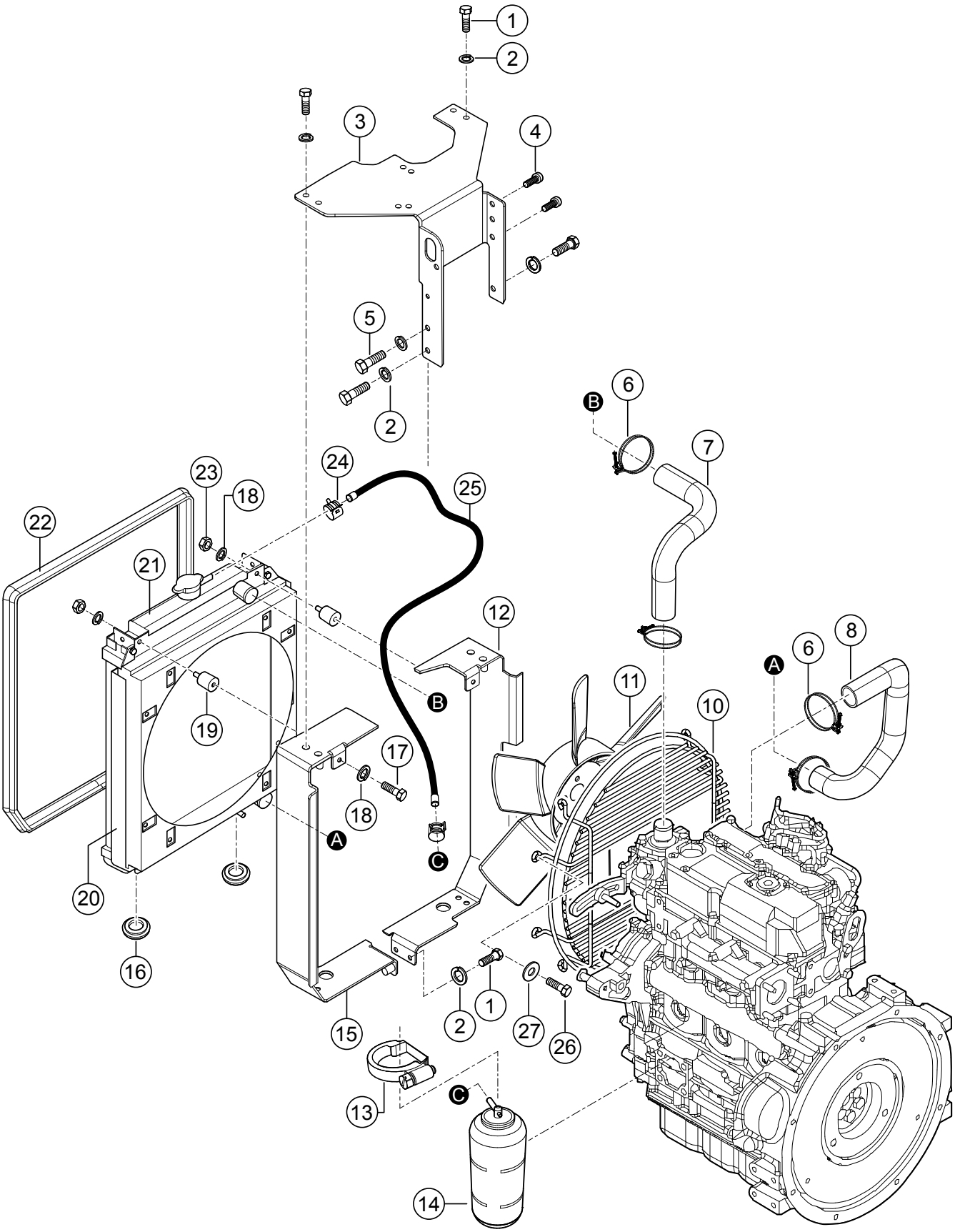
1
2
3
4
5
2
6
B
7
24
23
18
25
22
21
12
8
6
A
11
10
B
19
17
18
A
C
20
16
15
2
1
27
26
13
C
14

NO.	PART NO.	PART NAME	QTY.	REMARKS
1	J901764	HEX. HEAD SCREW	10	
2	1-952116	LOCK WASHER	13	
3	1242127	HOLDING PLATE	1	
4	1197136	SOCKET HEAD CAP SCREW	2	
5	J901762	HEX. HEAD SCREW	4	
6	1-952355	HOSE CLIP	4	
7	1-953041	COOLER, HOSE	1	
8	1100756	COOLER, HOSE	1	
10	1-30005841	PROTECTIVE GRID	1	
11	1-952338	FAN	1	
12	1226505	CASING PLATE	1	
13	1-952512	CLIP	1	
14	76-11981344510	EXPANSION VESSEL	1	
15	1226502	CASING PLATE	1	
16	1-952352	RUBBER CUSHION	2	
17	J901754	HEX. HEAD SCREW	2	
18	1-952199	LOCK WASHER	4	
19	1-952403	RUBBER MOUNT	2	
22	1-952852	SEALING CLAMP PROFILE, 1.75M	1	
23	J902123	HEX. NUT	2	
24	1181042	HOSE CLIP	5	
25	1-922332	HYDRAULIC HOSE, 0.7M L.	1	1 PC = 1M
26	J901756	HEX. HEAD SCREW	8	
27	J902284	WASHER	8	

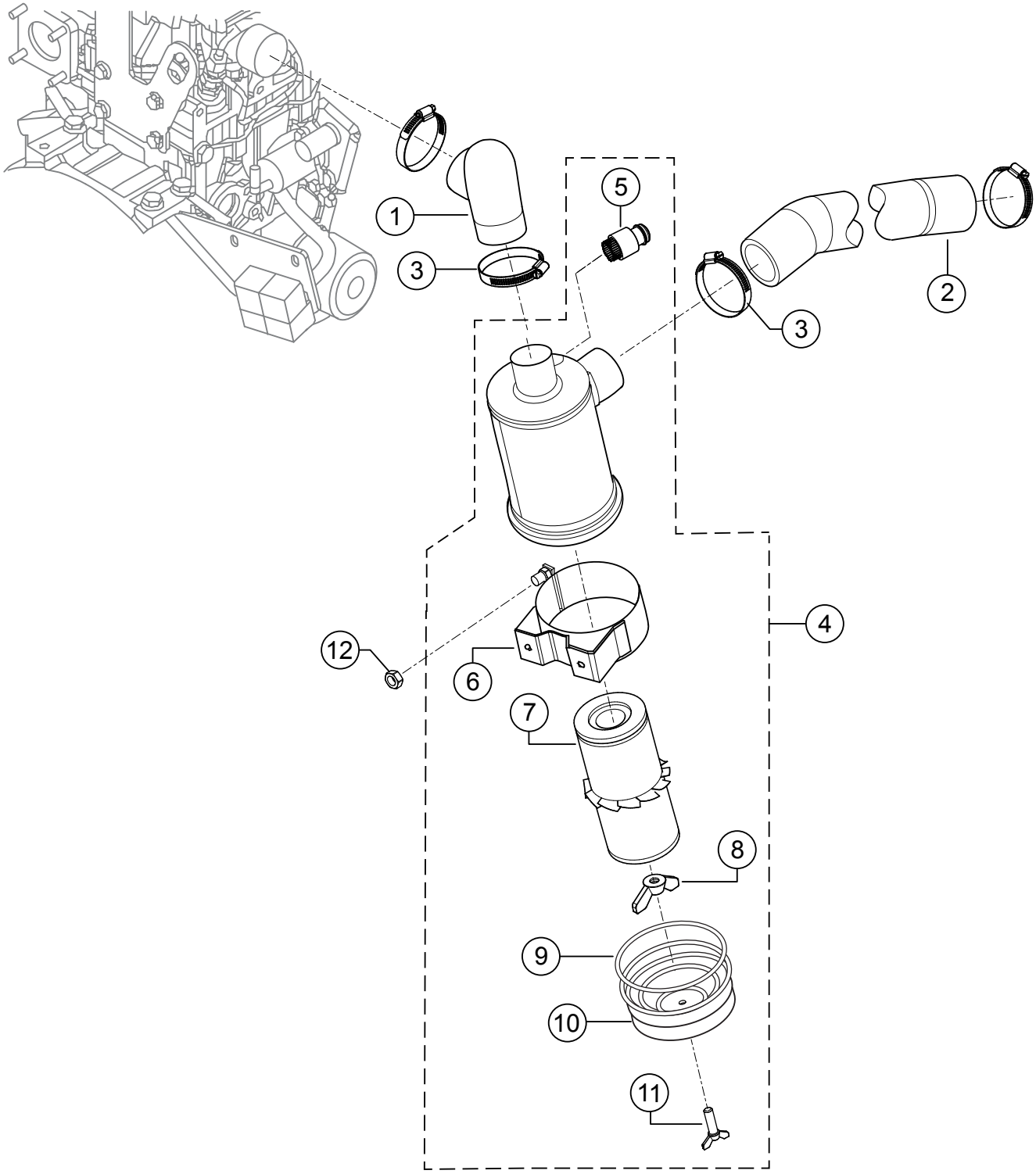
1
2
3
3
4
5
6
7
8
9
10
11
12

ENGINE AIR FILTER ASSY.

NO.	PART NO.	PART NAME	QTY.	REMARKS
1	1226987	MOULDED HOSE	1	
2	1226983	MOULDED HOSE	1	
3	J903778	HOSE CLIP	4	
4	1224408	AIR FILTER	1	INCLUDES ITEMS W/$
5$	1-952299	MAINTENANCE INDICATOR	1	
6$	1224979	AIR FILTER	1	
7$	1224448	FILTER ELEMENT	1	
8$	1224444	WING NUT	1	
9$	1224424	GASKET	1	
10$	1224426	COVER	1	
11$	1224441	SCREW	1	
12	J902124	HEX. NUT	2	

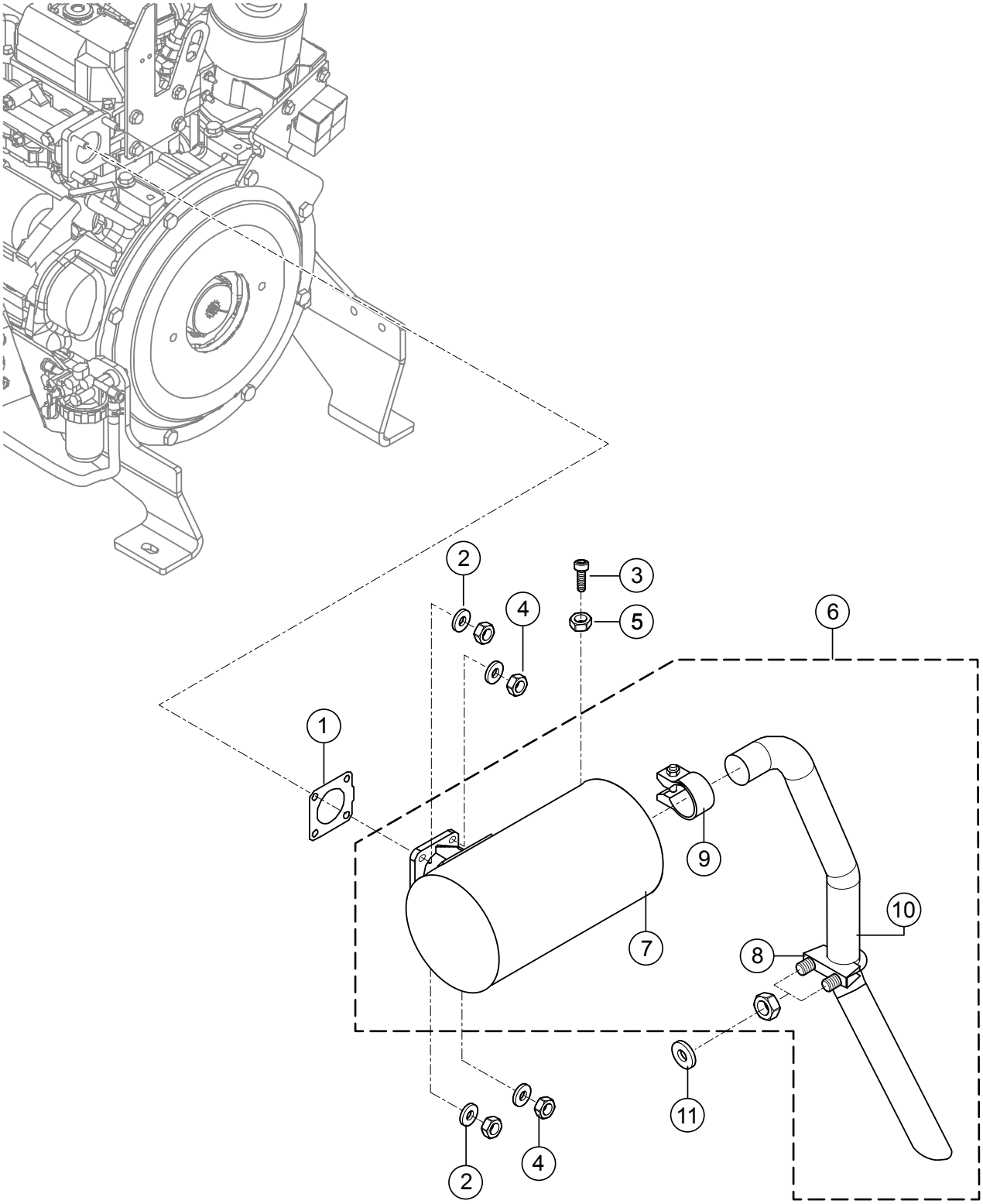
1
2
3
4
5
6
7
8
9
10
11
2
4

ENGINE MUFFLER ASSY.

NO.	PART NO.	PART NAME	QTY.	REMARKS
1	1-953040	EXHAUST GASKET	1	
2	1-908693	STRAIN WASHER	4	
3	J902644	SOCKET HEAD CAP SCREW	1	
4	J902124	HEX. NUT	4	
5	1-952157	LOCK WASHER	1	
6	1226617	SOUND ABSORBER	1	INCLUDES ITEMS W/#
7#	1076641	SILENCER	1	
8#	1-923200	PIPE CLIP	1	
9#	1076629	PIPE CLIP	1	
10#	1226616	EXHAUST PIPE	1	
11	J902263	WASHER	1	

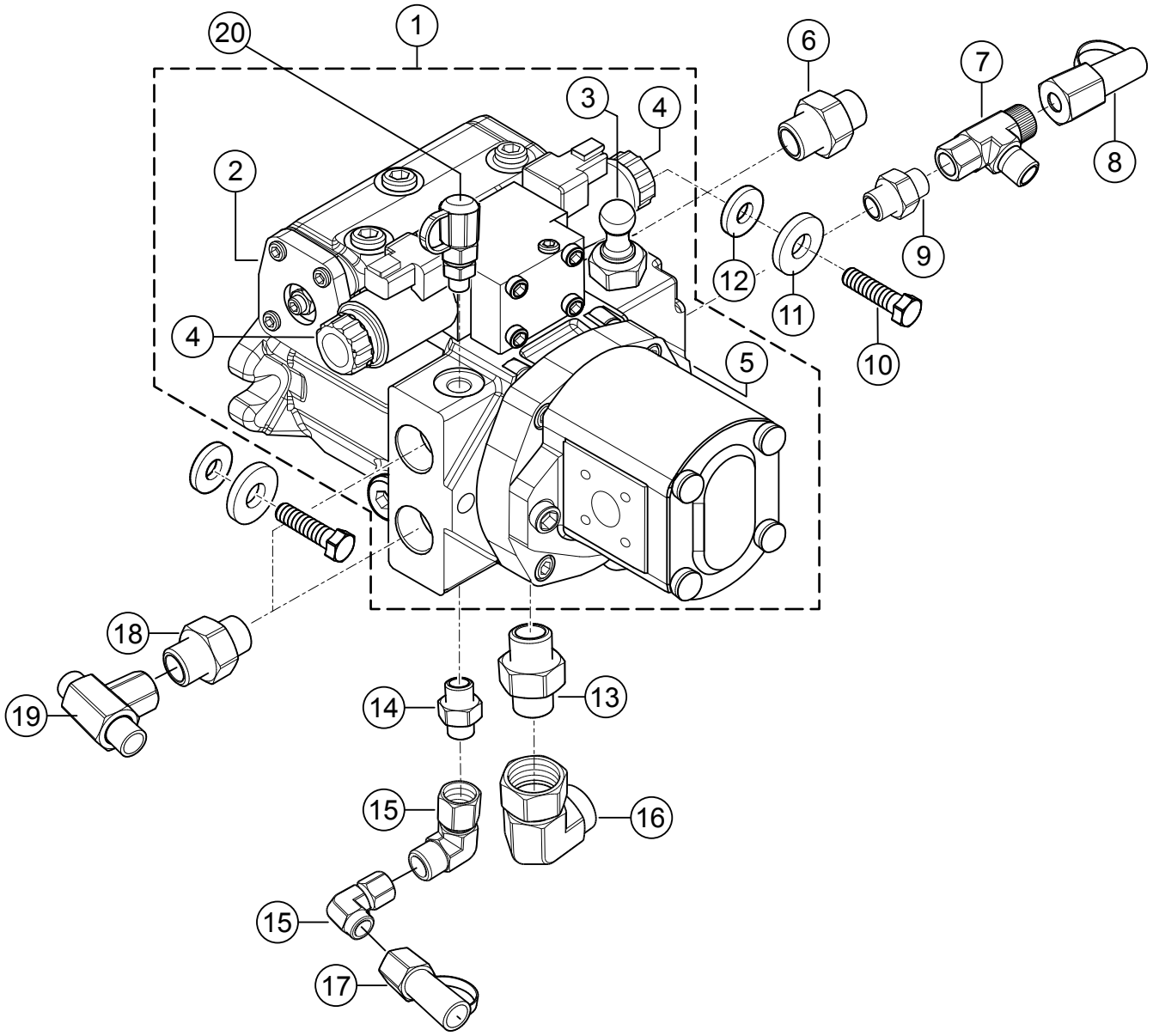
1
2
3
4
4
5
6
7
8
9
10
11
12
13
14
15
15
16
17
18
19
20

VARIABLE DISPLACEMENT PUMP ASSY.

NO.	PART NO.	PART NAME	QTY.	REMARKS
1	1194416	HYDRAULIC PUMP	1	INCLUDES ITEMS W/%
2%	1194359	SEALING KIT	1	
3%	1244274	PRESSURE RELIEF VALVE	2	
4%	1194414	MAGNETIC COIL	2	
5%	1244275	PRESSURE RELIEF VALVE	1	
6	1180953	MALE STUD COUPLING BODY	1	
7	1-901249	ADJUSTABLE MALE STUD RUN	1	
8	1205781	SCREW COUPLING	1	
9	1-942825	MALE STUD COUPLING BODY	1	
10	J901784	HEX. HEAD SCREW	2	
11	1-902387	STRAIN WASHER	2	
12	J907885	WASHER	2	
13	1-942504	MALE STUD COUPLING BODY	1	
14	1-942821	MALE STUD COUPLING BODY	1	
15	1-901209	ELBOW SOCKET	2	
16	1-901213	ELBOW SOCKET	1	
17	1-921283	SCREW COUPLING	1	
18	1242432	MALE STUD COUPLING BODY	2	
19	1-901236	T-SOCKET	1	
20	1-921031	SCREW COUPLING	1	

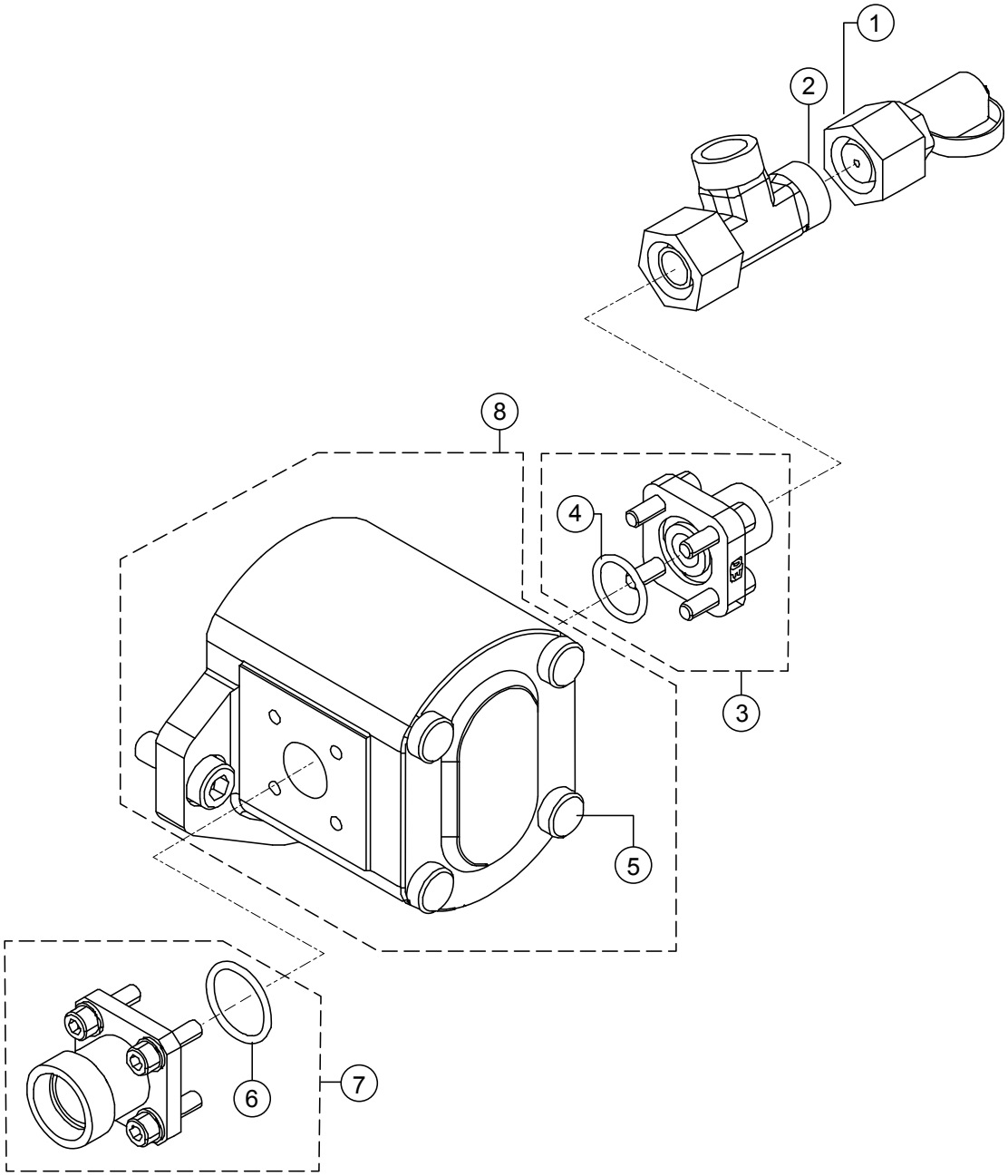
1
2
8
4
3
5
6
7

NO.	PART NO.	PART NAME	QTY.	REMARKS
1	1-921033	SCREW COUPLING	1	
2	1-901250	ADJUSTABLE MALE STUD RUN	1	
3	1-491354	STRAIGHT FLANGE CONNECTION	1	INCLUDES ITEMS W/#
4#	1-906670	O-RING	1	
5$	1194392	O-RING	1	
6%	1-906672	O-RING	1	
7	1-491577	STRAIGHT FLANGE CONNECTION	1	INCLUDES ITEMS W/%
8	1216440	GEAR PUMP	1	INCLUDES ITEMS W/$

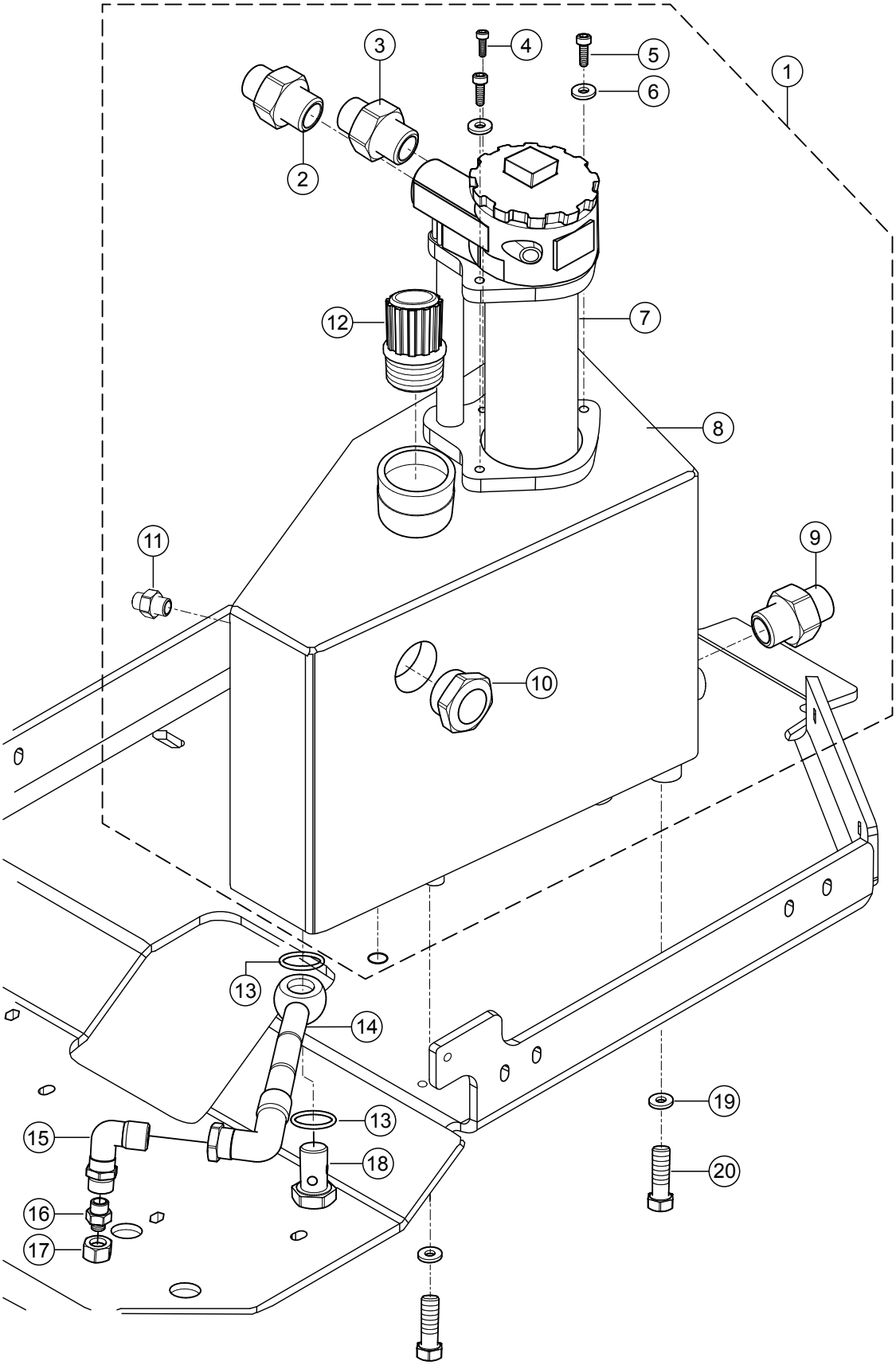
1
2
3
4
5
6
7
8
9
10
11
12
13
14
13
15
16
17
18
19
20

HYDRAULIC OIL TANK ASSY.

NO.	PART NO.	PART NAME	QTY.	REMARKS
1	1217678	HYDRAULIC OIL TANK ASSY.	1	INCLUDES ITEMS W/$
2$	1-942781	MALE STUD COUPLING BODY	1	
3$	1-942818	MALE STUD COUPLING BODY	1	
4$	J902634	SOCKET HEAD CAP SCREW	1	
5$	J902646	SOCKET HEAD CAP SCREW	2	
6$	J902264	WASHER	2	
7$	1179047	RETURN-SUCTION FILTER	1	
8$	1217677	OIL TANK	1	
9$	1-948155	MALE STUD COUPLING BODY	1	
10$	1179076	INSPECTION GLASS	1	
11$	1183844	MALE STUD COUPLING BODY	1	
12$	1242184	BREATHER FILTER	1	
13	1-906940	SEALING RING	2	
14	1232770	HYDRAULIC HOSE	1	
15	1-901447	BULKHEAD ELBOW NIPPLE	1	
16	1-901276	SEALING PLUG	1	
17	1-901003	UNION NUT	1	
18	1-954000	HOLLOW SCREW	1	
19	J902263	WASHER	3	
20	J901763	HEX. HEAD SCREW	3	

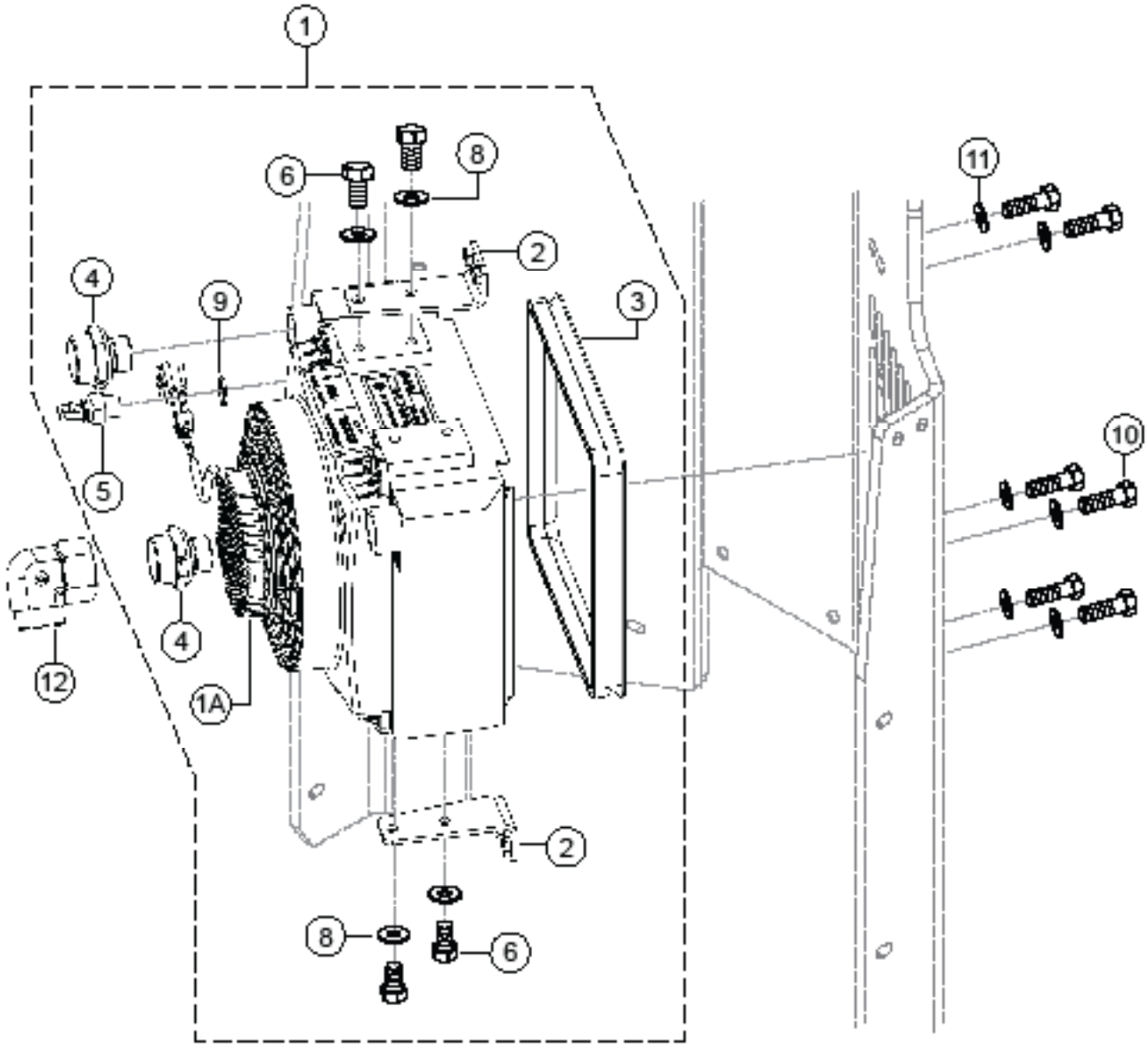
1
6
8
11
2
4
9
3
5
10
4
12
1A
2
8
6

NO.	PART NO.	PART NAME	QTY.	REMARKS
1	1221652	OIL COOLER ASSY.	1	INCLUDES ITEMS W/#
1A#	1178292	OIL COOLER	1	
2#	1251656	HOLDING PLATE	3	
3#	1178294	CLAMPING PROFILE	1	
4#	1221314	MALE STUD COUPLING BODY	2	
5#	1225724	TEMPERATURE SWITCH	1	
6#	J901762	HEX. HEAD SCREW	6	
8#	J902263	WASHER	6	
9#	1225736	SEALING RING	1	
10	J901764	HEX. HEAD SCREW	6	
11	J902285	WASHER	6	
12	1-901214	ELBOW SOCKET	1	

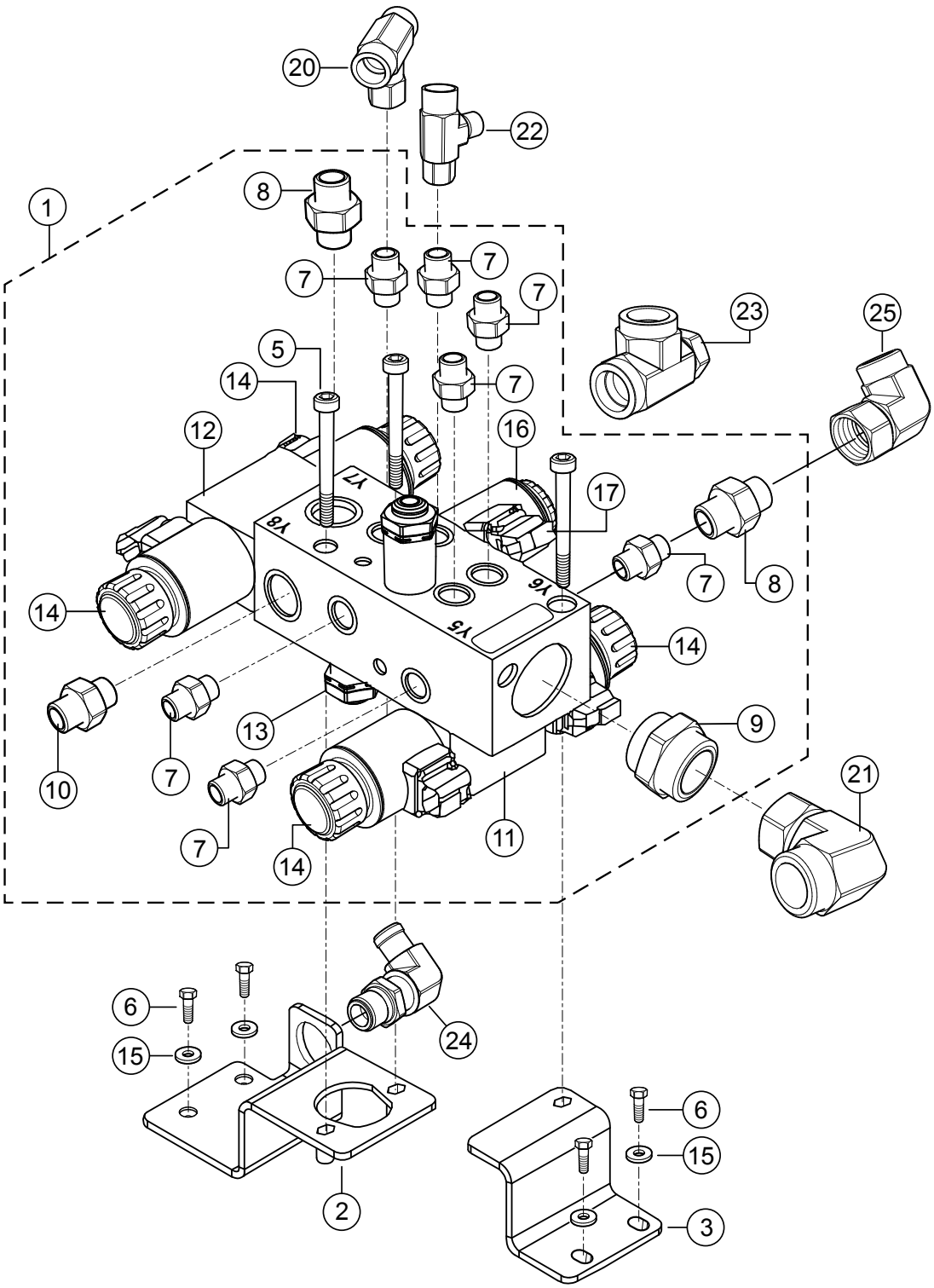
20
22
1
8
7
7
7
7
23
25
5
14
7
12
16
17
Y7
Y8
Y6
Y5
7
8
14
14
13
9
10
7
21
7
14
11
6
15
24
6
15
2
3

NO.	PART NO.	PART NAME	QTY.	REMARKS
1	1219129	VALVE BLOCK	1	INCLUDES ITEMS W/%
2	1251637	MOUNTING PLATE	1	
3	1251638	MOUNTING PLATE	1	
5%	1-902686	SOCKET HEAD CAP SCREW	3	
6	J901764	HEX. HEAD SCREW	4	
7%	1197813	MALE STUD COUPLING BODY	7	
8%	1-942785	MALE STUD COUPLING BODY	2	
9%	1-942781	MALE STUD COUPLING BODY	1	
10%	1-942784	MALE STUD COUPLING BODY	1	
11%	1221373	VALVE	1	
12%	1221374	VALVE	1	
13%	1221375	VALVE	1	
14%	1221398	MAGNETIC COIL	4	
15	J902263	WASHER	4	
16%	1221378	VALVE	1	
17%	1221397	MAGNETIC COIL	1	
20	J901458	T-SOCKET	1	
21	1-901214	ELBOW SOCKET	1	
22	1-901436	ADJUSTABLE MALE STUD RUN	1	
23	1-922516	BANJO COUPLING	1	
24	1-901447	BULKHEAD ELBOW NIPPLE	1	
25	J901211	ELBOW SOCKET	1	

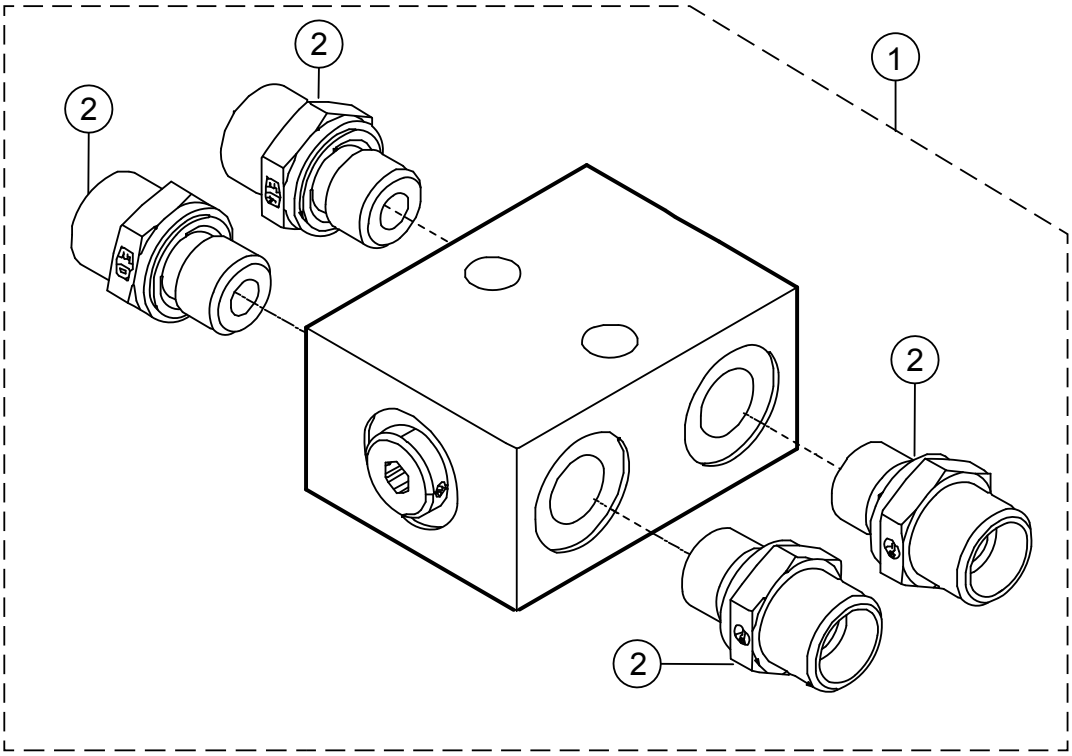
2
2
1
2
2

HYDRAULIC BLOCK ASSY.

NO.	PART NO.	PART NAME	QTY.	REMARKS
1	1242646	HYDRAULIC BLOCK	1	INCLUDES ITEM W/$
2$	1197813	MALE STUD COUPLING BODY	4	

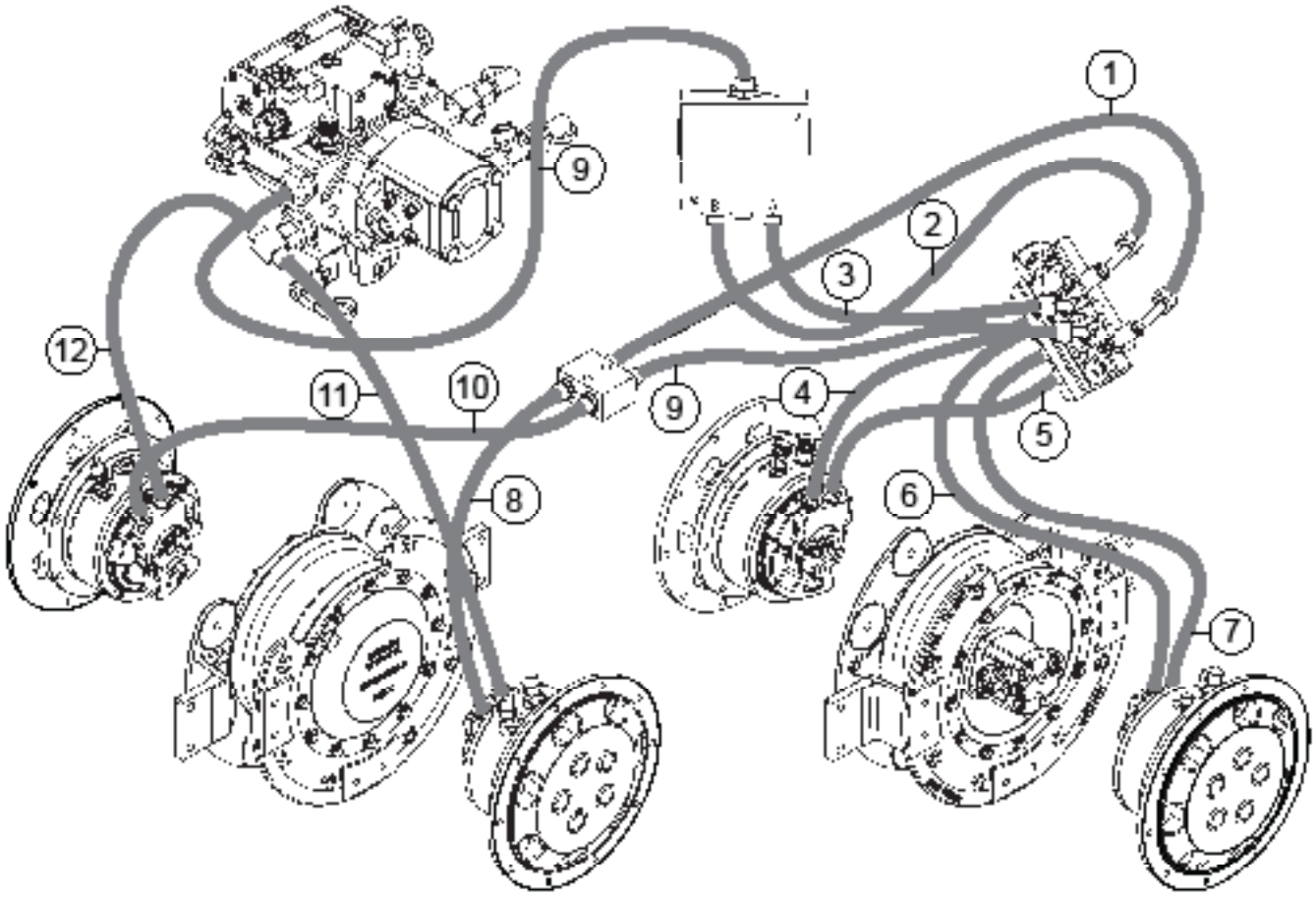
1
2
3
4
5
6
7
8
9
9
10
11
12

HOSES FOR DRIVE SYSTEM ASSY.

NO.	PART NO.	PART NAME	QTY.	REMARKS
1	1243101	HYDRAULIC HOSE	1	
2	1243103	HYDRAULIC HOSE	1	
3	1243104	HYDRAULIC HOSE	1	
4	1232787	HYDRAULIC HOSE	1	
5	1232724	HYDRAULIC HOSE	1	
6	1243107	HYDRAULIC HOSE	1	
7	1232726	HYDRAULIC HOSE	1	
8	1243099	HYDRAULIC HOSE	1	
9	1243100	HYDRAULIC HOSE	1	
10	1243098	HYDRAULIC HOSE	1	
11	1243096	HYDRAULIC HOSE	1	
12	1243097	HYDRAULIC HOSE	1	

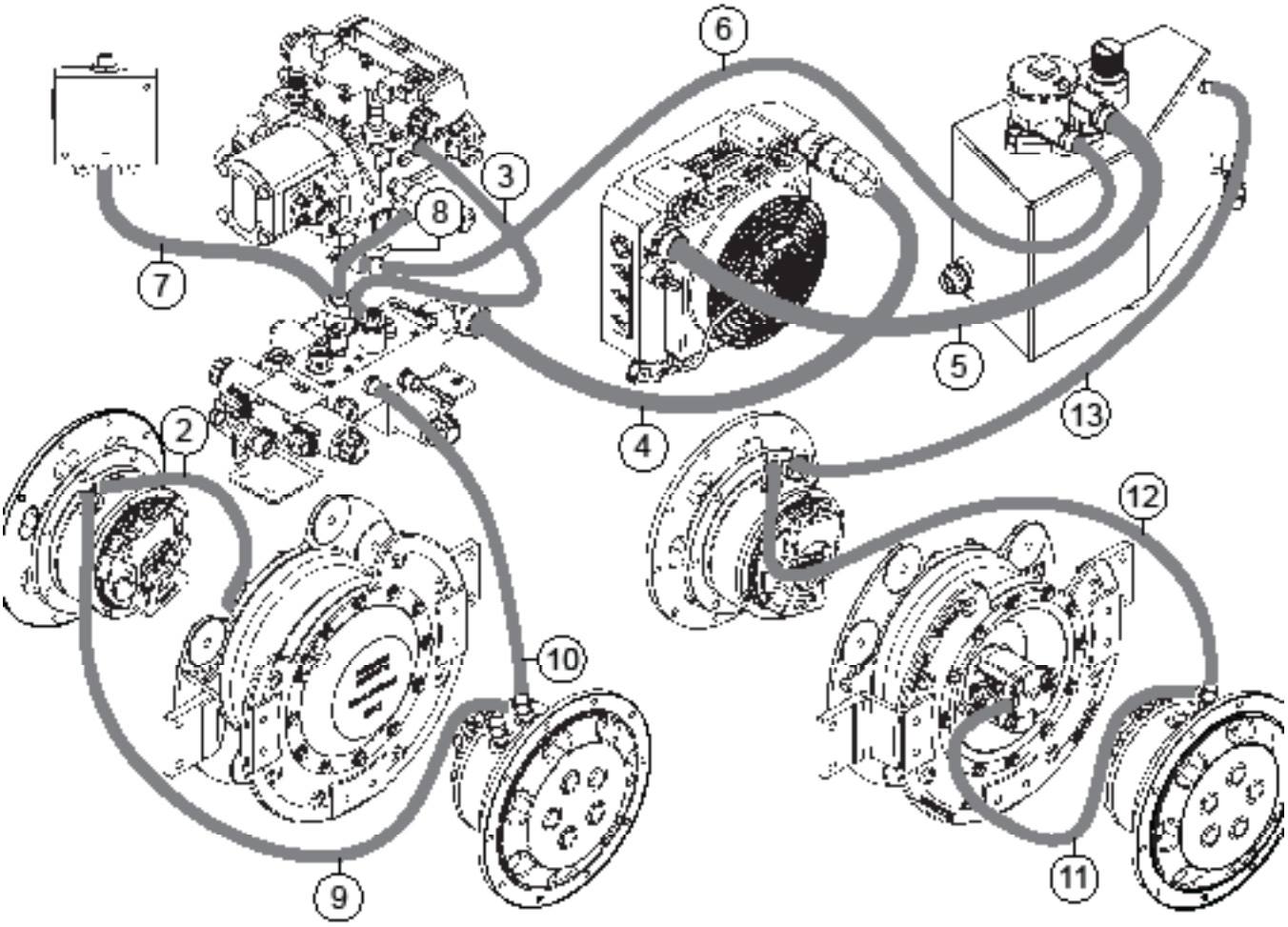
6
3
8
7
5
13
2
4
12
10
9
11

SUCTION AND LEAKAGE ASSY.

NO.	PART NO.	PART NAME	QTY.	REMARKS
2	1232773	HYDRAULIC HOSE	1	
3	1247785	HYDRAULIC HOSE	1	
4	1232789	HYDRAULIC HOSE	1	
5	1232800	HYDRAULIC HOSE	1	
6	1232801	HYDRAULIC HOSE	1	
7	1243091	HYDRAULIC HOSE	1	
8	1243090	HYDRAULIC HOSE	1	
9	1251203	HYDRAULIC HOSE	1	
10	1251204	HYDRAULIC HOSE	1	
11	1232773	HYDRAULIC HOSE	1	
12	1251203	HYDRAULIC HOSE	1	
13	1251200	HYDRAULIC HOSE	1	

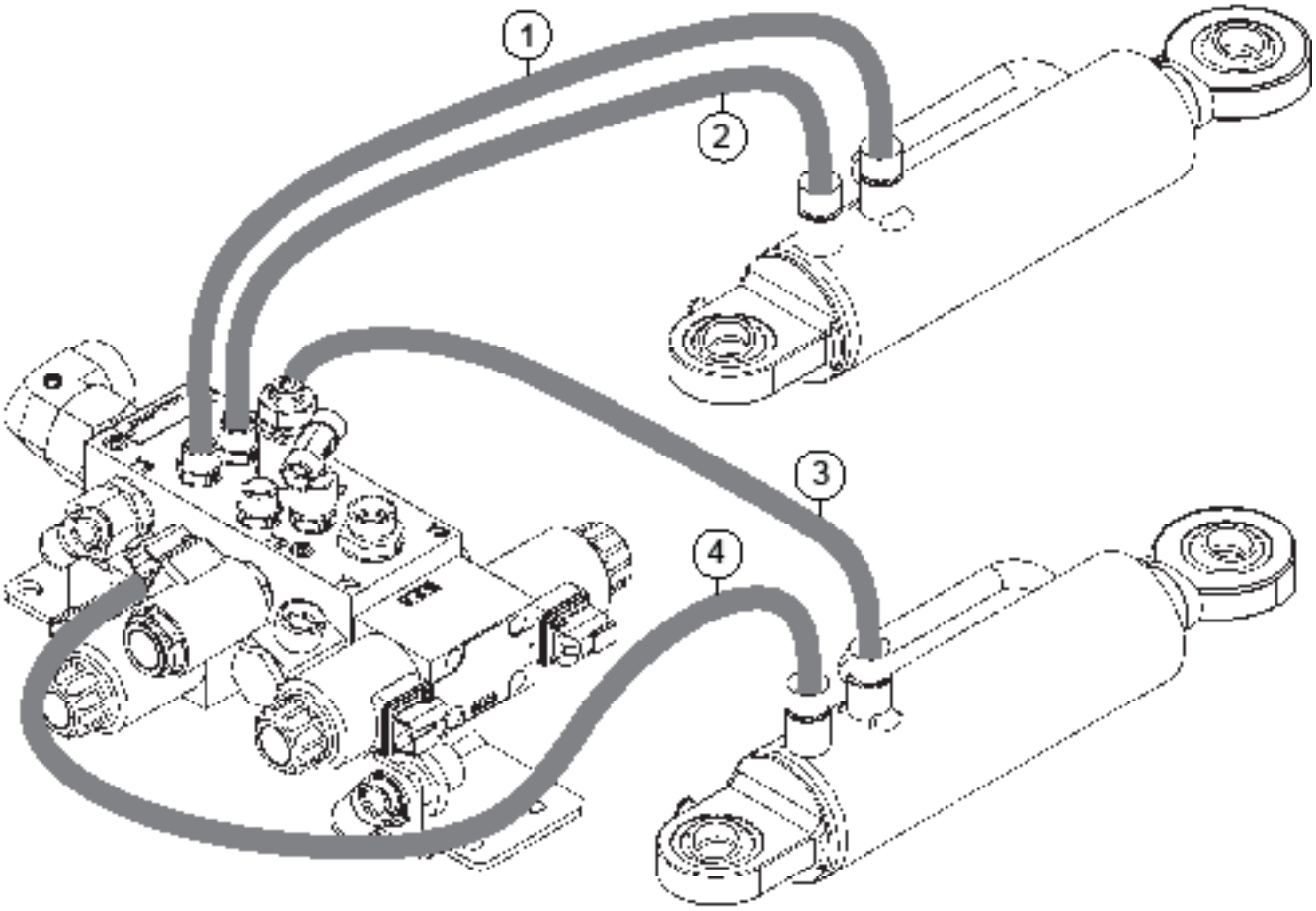
1
2
3
4

HOSES FOR STEERING SYSTEM ASSY.

NO.	PART NO.	PART NAME	QTY.	REMARKS
1	1232758	HYDRAULIC HOSE	1	
2	1232759	HYDRAULIC HOSE	1	
3	1232754	HYDRAULIC HOSE	1	
4	1232756	HYDRAULIC HOSE	1	

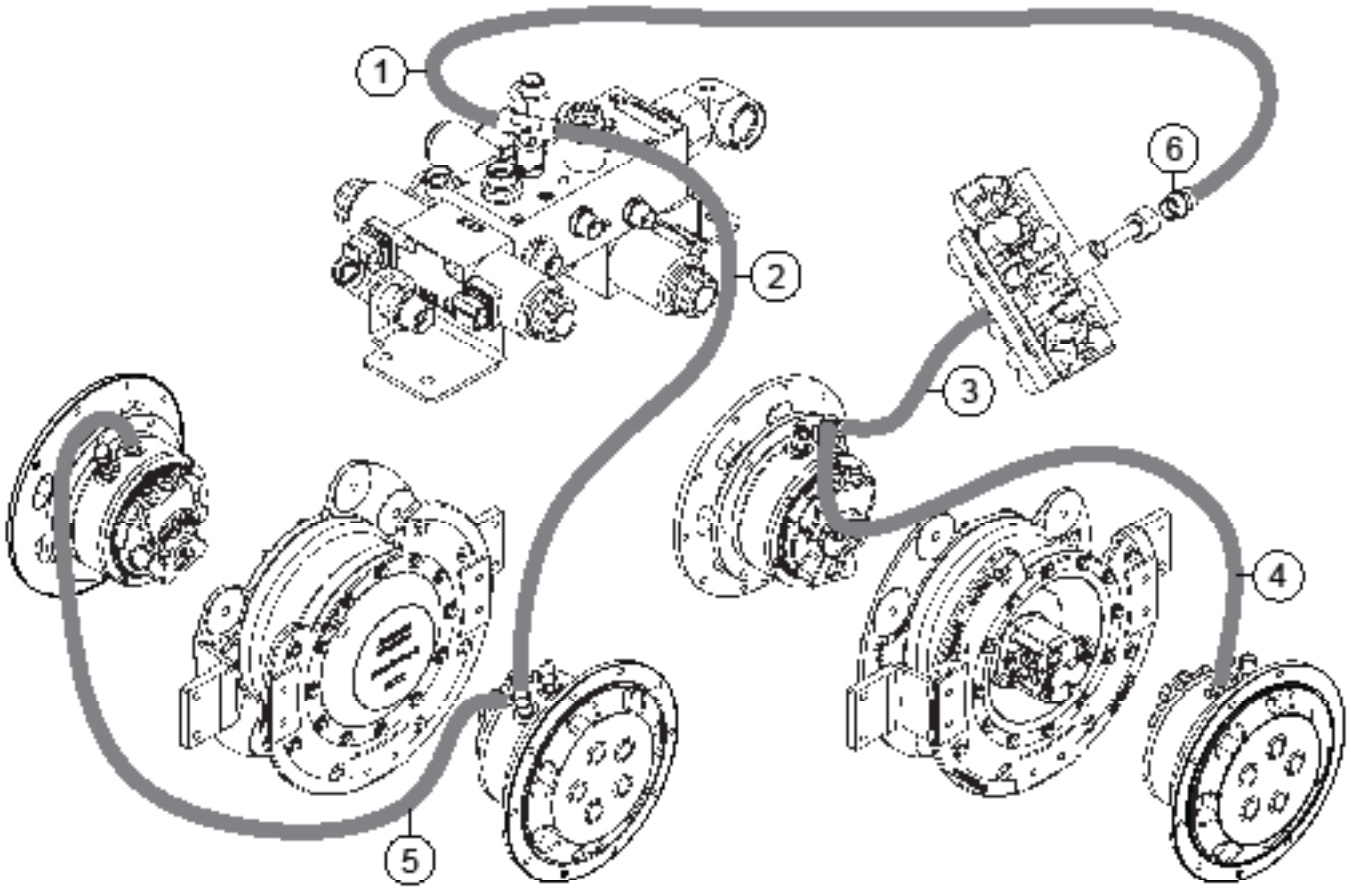
1
2
3
4
5
6

BRAKE HOSES ASSY.

NO.	PART NO.	PART NAME	QTY.	REMARKS
1	1232752	HYDRAULIC HOSE	1	
2	1232765	HYDRAULIC HOSE	1	
3	1243109	HYDRAULIC HOSE	1	
4	1251202	HYDRAULIC HOSE	1	
5	1251202	HYDRAULIC HOSE	1	
6	1-901010	STRAIGHT FITTING	1	

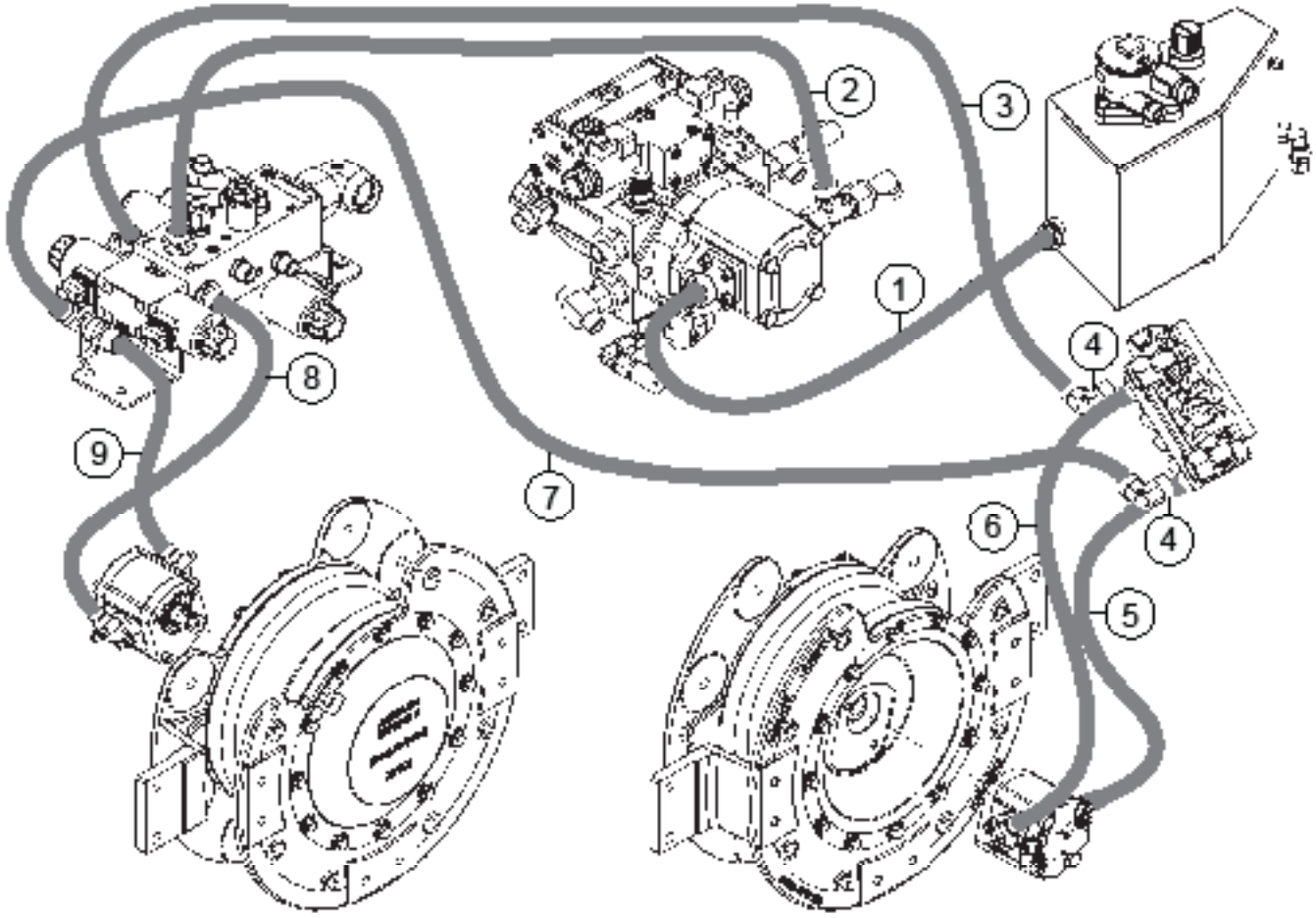
1
2
3
4
4
5
6
7
8
9

HOSES FOR VIBRATION SYSTEM ASSY.

NO.	PART NO.	PART NAME	QTY.	REMARKS
1	1243110	HYDRAULIC HOSE	1	
2	1232681	HYDRAULIC HOSE	1	
3	1232697	HYDRAULIC HOSE	1	
4	1-901027	ANGLE	2	
5	1251253	HYDRAULIC HOSE	1	
6	1232747	HYDRAULIC HOSE	1	
7	1232688	HYDRAULIC HOSE	1	
8	1232785	HYDRAULIC HOSE	1	
9	1232722	HYDRAULIC HOSE	1	

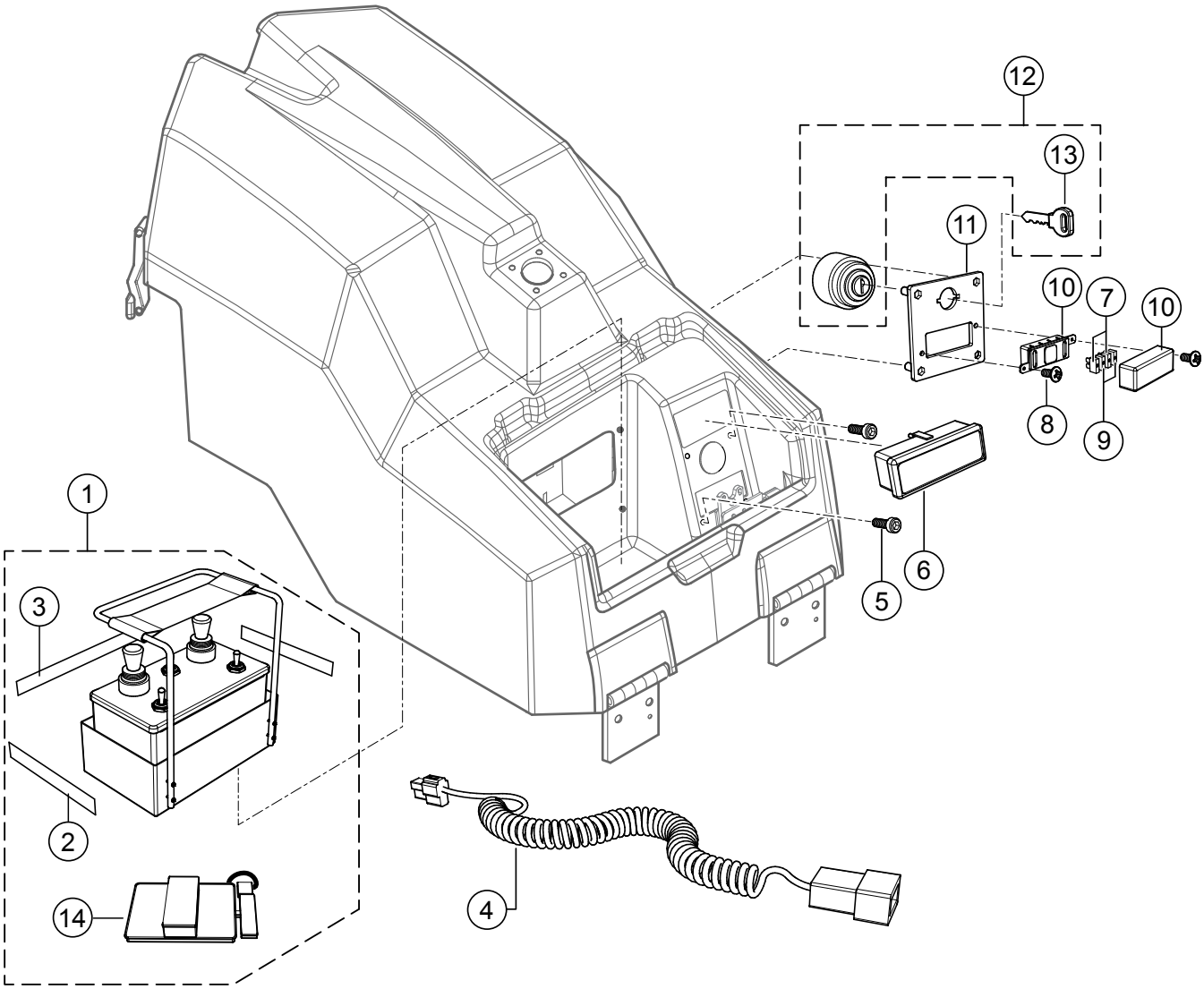
12
13
11
10
7
10
8
9
1
3
6
5
2
14
4

NO.	PART NO.	PART NAME	QTY.	REMARKS
1	1226283	INFRARED TRANSMITTER	1	INCLUDES ITEMS W/#
2#	1253867	REFLECTOR	2	
3#	1253868	REFLECTOR	2	
4	1242589	CABLE	1	
5	1-948204	SOCKET HEAD CAP SCREW	4	
6	1226581	DISPLAY UNIT	1	
7	1-921583	FUSE, 10 AMP	2	
8	1-903683	BLIND RIVET	2	
9	1-921585	FUSE, 25 AMP	2	
10	1-831072	FUSE MODULE	1	
11	1252132	HOLDING PLATE	1	
12	1-30005179	IGNITION LOCK	1	INCLUDES ITEM W/$
13$	1-14607	IGNITION KEY	1	
14	1266872	TRANSMITTER BATTERY	1	

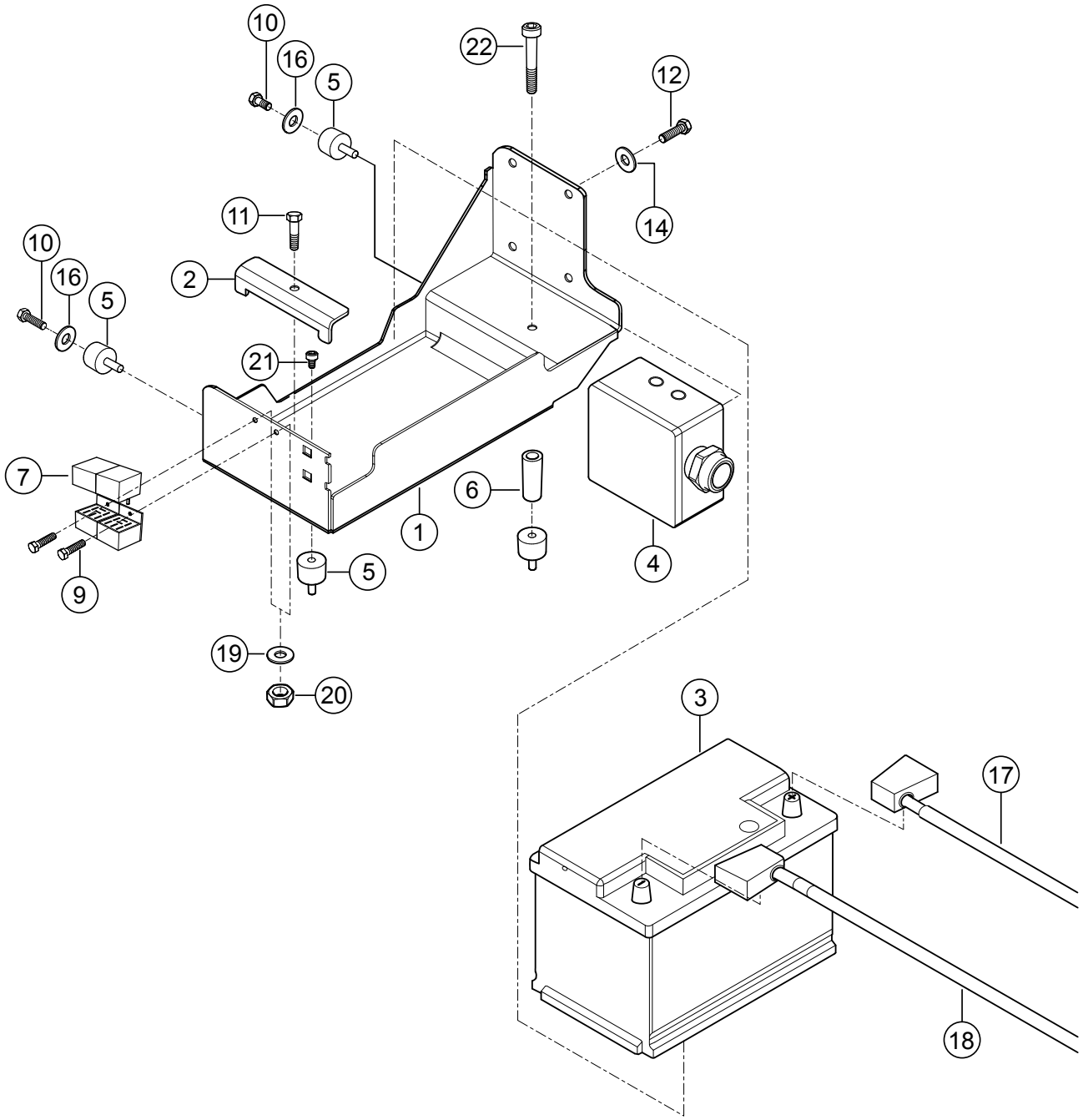
10
16
5
22
12
14
11
10
16
5
2
21
7
9
6
1
5
4
19
20
3
17
18

HOLDING DEVICE WITH BATTERY ASSY.

NO.	PART NO.	PART NAME	QTY.	REMARKS
1	1252133	BATTERY PLATE	1	
2	1226975	CLAMPING ANGLE	1	
3	1127111	STARTER BATTERY	1	
4	1226284	CONTROL UNIT	1	
5	1-923280	RUBBER MOUNT	4	
6	1250943	ROD W/DRILLED HOLE	1	
7	1227066	RELAY	2	
9	1-901747	HEX. HEAD SCREW	2	
10	J901762	HEX. HEAD SCREW	2	
11	J901766	HEX. HEAD SCREW	1	
12	J901763	HEX. HEAD SCREW	4	
14	1-908693	STRAIN WASHER	4	
16	J902263	WASHER	2	
17	1236038	BATTERY CABLE, POSITIVE	1	
18	1236036	BATTERY CABLE, NEGATIVE	1	
19	J902260	WASHER	2	
20	J902121	HEX. NUT	2	
21	J902637	SOCKET HEAD CAP SCREW	1	
22	1-902693	SOCKET HEAD CAP SCREW	1	

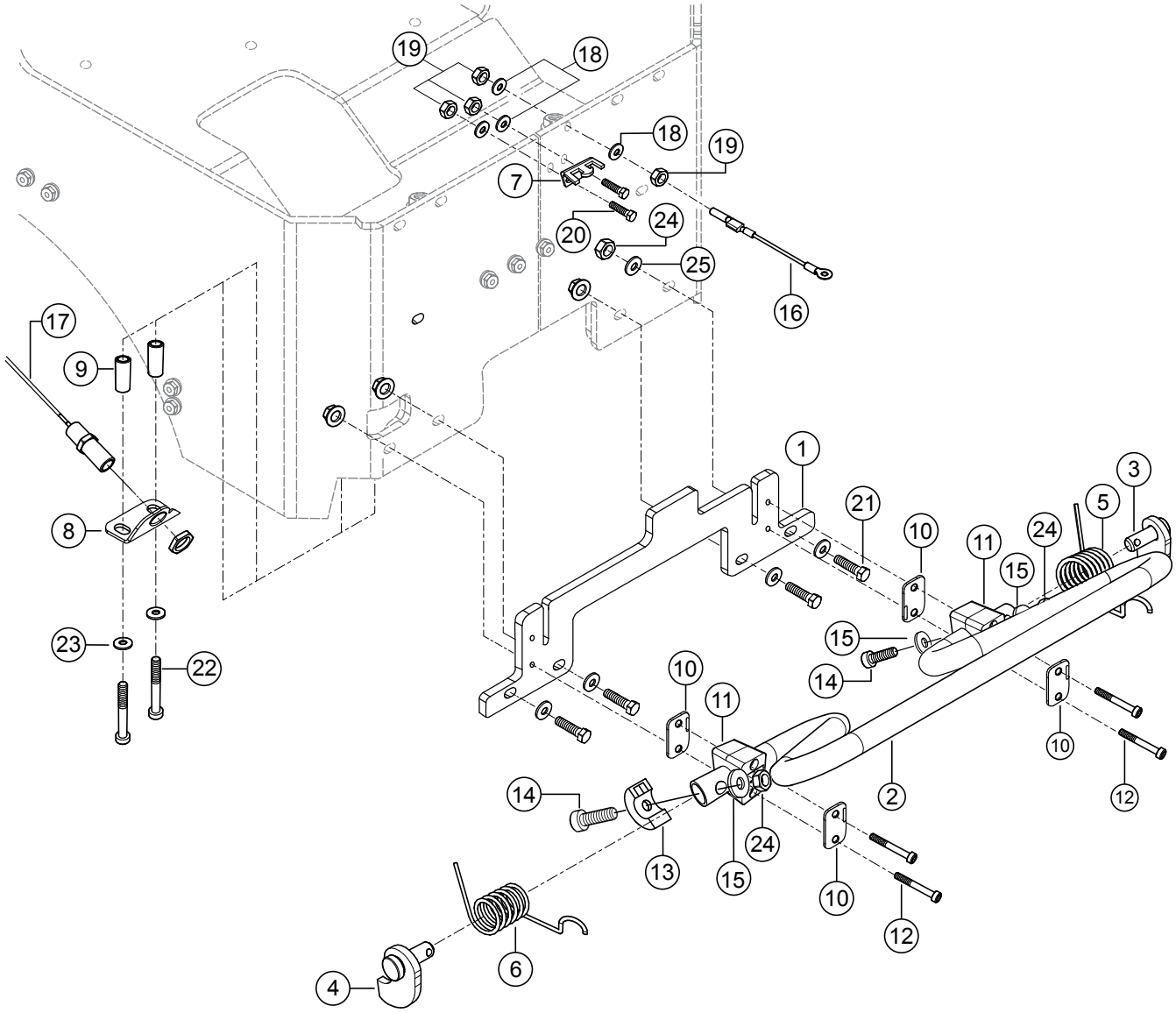
19
18
18
19
7
20
24
25
16
17
9
8
23
22
1
21
10
11
24
5
3
15
15
14
10
11
10
12
14
2
13
24
15
10
12
6
4

SHUTDOWN BAR ASSY. (OPTION)

NO.	PART NO.	PART NAME	QTY.	REMARKS
1	1241600	HOLDING PLATE	1	
2	1218322	PIPE	1	
3	1241607	LIMIT STOP	1	
4	1241605	LIMIT STOP	1	
5	1218324	COMPRESSION SPRING	1	
6	1218323	COMPRESSION SPRING	1	
7	1225894	FIXTURE	1	
8	1218340	HOLDING PLATE	1	
9	1225895	ROD W/DRILLED HOLE	2	
10	1189754	COVER PLATE	4	
11	1241110	CLAMP BODY	2	
12	1-902684	SOCKET HEAD CAP SCREW	4	
13	3-52075	SWITCHING CAM	1	
14	J902701	SOCKET HEAD CAP SCREW	2	
15	J941593	WASHER	3	
16	3-18873	STAY ROPE	1	
17	3-52074	SAFETY SWITCH	1	
18	J902262	WASHER	4	
19	J902123	HEX. NUT	4	
20	J901757	HEX. HEAD SCREW	2	
21	H0105624	HEX. HEAD SCREW	4	
22	1183223	HEX. HEAD SCREW	2	
23	1-908693	STRAIN WASHER	2	
24	J902125	HEX. NUT	6	
25	J902264	WASHER	8	

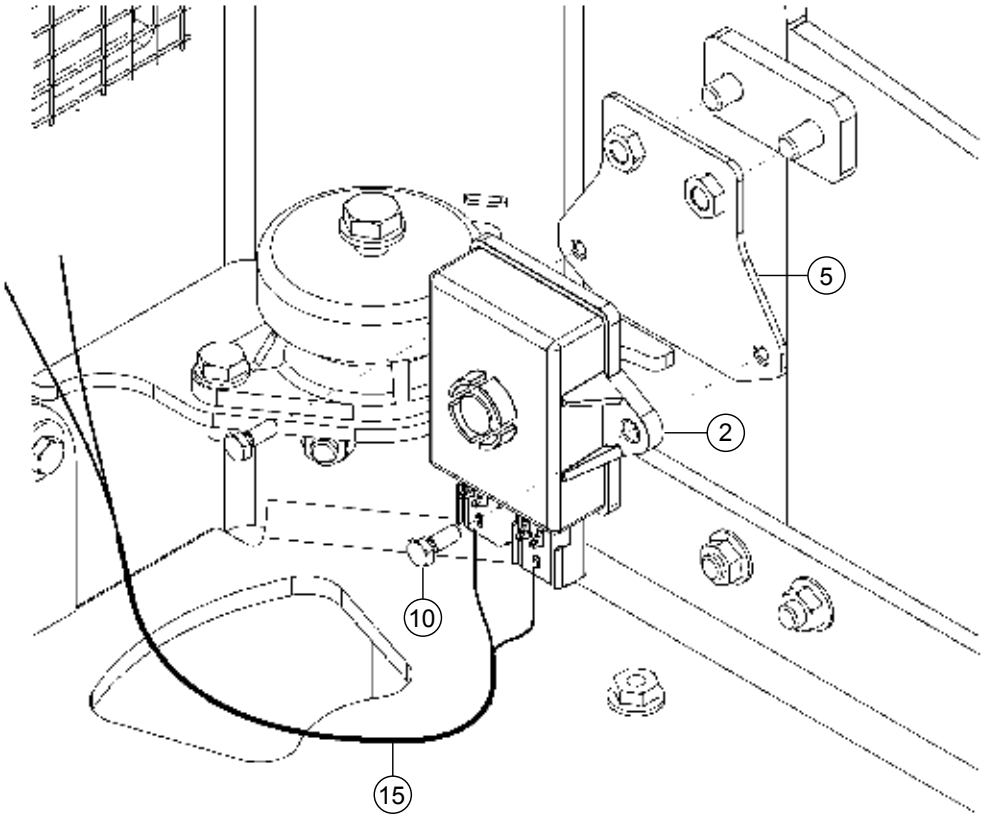
5
2
10
15

HEIGHT CONTROL ASSY.

NO.	PART NO.	PART NAME	QTY.	REMARKS
2	1260881	SENSOR	1	
5	1270253	HOLDING PLATE	1	
10	J901756	HEXAGON HEAD SCREW	2	
15	1238635	CABLE HARNESS	1	

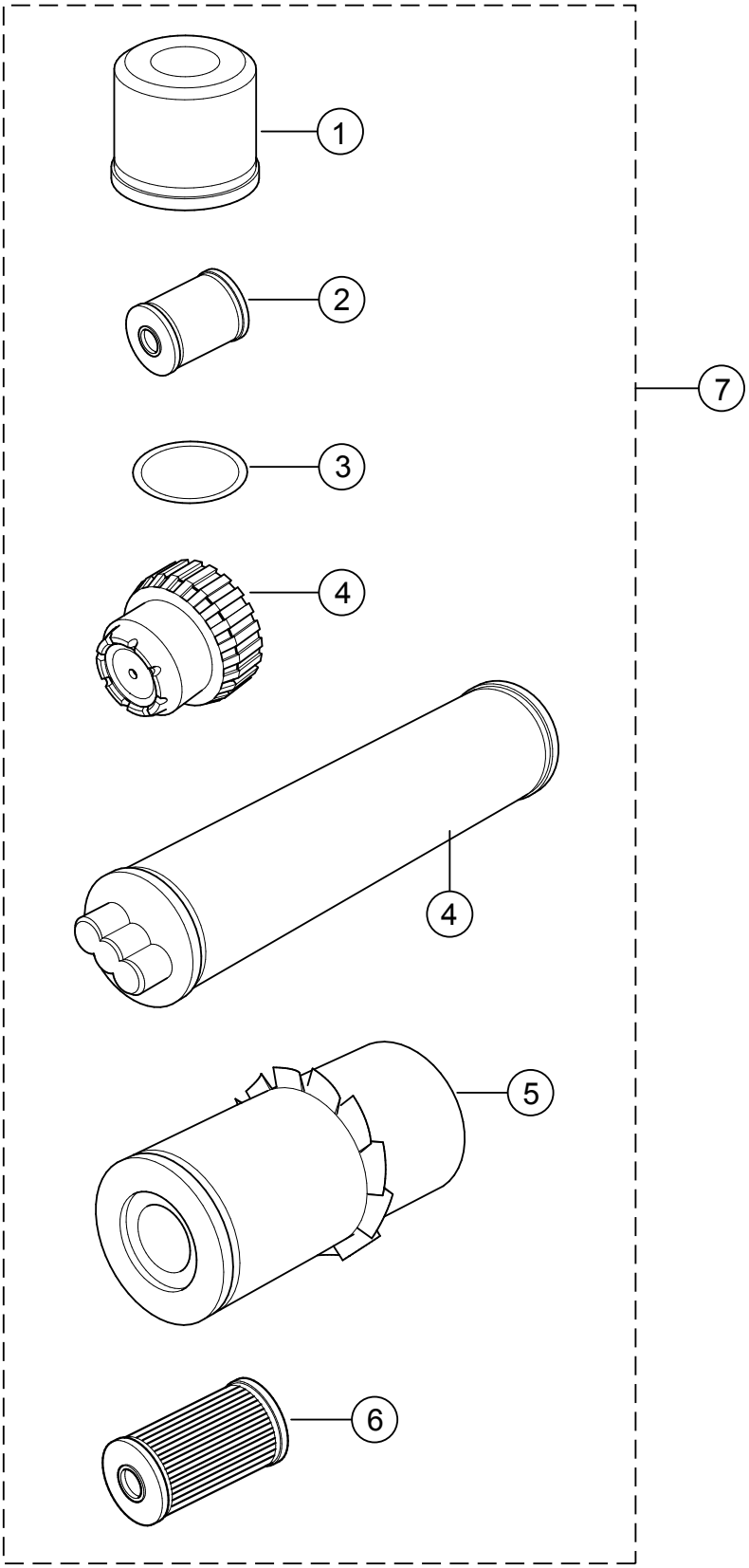
1
2
7
3
4
4
5
6

NO.	PART NO.	PART NAME	QTY.	REMARKS
1#	1-954075	ENGINE FILTER	1	
2#	1-954195	FILTER ELEMENT	1	
3#	76-10210355520	O-RING	1	
4#	1182946	FILTER SET	1	
5#	1224448	FILTER ELEMENT	1	
6#	1-954197	FILTER ELEMENT	1	
7	1228783	FILTER SET	1	INCLUDES ITEMS W/#

PAYMENT TERMS

Terms of payment for parts are net 30 days.

FREIGHT POLICY

All parts orders will be shipped collect or prepaid with the charges added to the invoice. All shipments are F.O.B. point of origin. Multiquip's responsibility ceases when a signed manifest has been obtained from the carrier, and any claim for shortage or damage must be settled between the consignee and the carrier.

MINIMUM ORDER

The minimum charge for orders from Multiquip is $15.00 net. Customers will be asked for instructions regarding handling of orders not meeting this requirement.

RETURNED GOODS POLICY

Return shipments will be accepted and credit will be allowed, subject to the following provisions:

1. A Returned Material Authorization must be approved by Multiquip prior to shipment.
2. To obtain a Return Material Authorization, a list must be provided to Multiquip Parts Sales that defines item numbers, quantities, and descriptions of the items to be returned.
   a. The parts numbers and descriptions must match the current parts price list.
   b. The list must be typed or computer generated.
   c. The list must state the reason(s) for the return.
   d. The list must reference the sales order(s) or invoice(s) under which the items were originally purchased.
   e. The list must include the name and phone number of the person requesting the RMA.
3. A copy of the Return Material Authorization must accompany the return shipment.
4. Freight is at the sender's expense. All parts must be returned freight prepaid to Multiquip's designated receiving point.
5. Parts must be in new and resalable condition, in the original Multiquip package (if any), and with Multiquip part numbers clearly marked.
6. The following items are not returnable:
   a. Obsolete parts. (If an item is in the price book and shows as being replaced by another item, it is obsolete.)
   b. Any parts with a limited shelf life (such as gaskets, seals, "O" rings, and other rubber parts) that were purchased more than six months prior to the return date.
   c. Any line item with an extended dealer net price of less than $5.00.
   d. Special order items.
   e. Electrical components.
   f. Paint, chemicals, and lubricants.
   g. Decals and paper products.
   h. Items purchased in kits.
7. The sender will be notified of any material received that is not acceptable.
8. Such material will be held for five working days from notification, pending instructions. If a reply is not received within five days, the material will be returned to the sender at his expense.
9. Credit on returned parts will be issued at dealer net price at time of the original purchase, less a 15% restocking charge.
10. In cases where an item is accepted, for which the original purchase document can not be determined, the price will be based on the list price that was effective twelve months prior to the RMA date.
11. Credit issued will be applied to future purchases only.

PRICING AND REBATES

Prices are subject to change without prior notice. Price changes are effective on a specific date and all orders received on or after that date will be billed at the revised price. Rebates for price declines and added charges for price increases will not be made for stock on hand at the time of any price change.

Multiquip reserves the right to quote and sell direct to Government agencies, and to Original Equipment Manufacturer accounts who use our products as integral parts of their own products.

SPECIAL EXPEDITING SERVICE

A $35.00 surcharge will be added to the invoice for special handling including bus shipments, insured parcel post or in cases where Multiquip must personally deliver the parts to the carrier.

LIMITATIONS OF SELLER'S LIABILITY

Multiquip shall not be liable hereunder for damages in excess of the purchase price of the item with respect to which damages are claimed, and in no event shall Multiquip be liable for loss of profit or good will or for any other special, consequential or incidental damages.

LIMITATION OF WARRANTIES

No warranties, express or implied, are made in connection with the sale of parts or trade accessories nor as to any engine not manufactured by Multiquip. Such warranties made in connection with the sale of new, complete units are made exclusively by a statement of warranty packaged with such units, and Multiquip neither assumes nor authorizes any person to assume for it any other obligation or liability whatever in connection with the sale of its products. Apart from such written statement of warranty, there are no warranties, express, implied or statutory, which extend beyond the description of the products on the face hereof.

Effective: February 22, 2006

NOTES

PARTS MANUAL

HERE'S HOW TO GET HELP

PLEASE HAVE THE MODEL AND SERIAL NUMBER ON-HAND WHEN CALLING

UNITED STATES

Multiquip Corporate Office

18910 Wilmington Ave.
Carson, CA 90746
Contact: mq@multiquip.com
Tel. (800) 421-1244
Fax (310) 537-3927

MQ Parts Department

800-427-1244
310-537-3700
Fax: 800-672-7877
Fax: 310-637-3284

Service Department

800-421-1244
310-537-3700
Fax: 310-537-4259

Warranty Department

800-421-1244
310-537-3700
Fax: 310-943-2249

Technical Assistance

800-478-1244
Fax: 310-943-2238

CANADA

Multiquip

4110 Industriel Boul.
Laval, Quebec, Canada H7L 6V3
Contact: jmartin@multiquip.com
Tel: (450) 625-2244
Tel: (877) 963-4411
Fax: (450) 625-8664

UNITED KINGDOM

Multiquip (UK) Limited Head Office

Unit 2, Northpoint Industrial Estate,
Globe Lane,
Dukinfield, Cheshire SK16 4UJ
Contact: sales@multiquip.co.uk
Tel: 0161 339 2223
Fax: 0161 339 3226

© COPYRIGHT 2015, MULTIQUIP INC.

Multiquip Inc, the MQ logo are registered trademarks of Multiquip Inc. and may not be used, reproduced, or altered without written permission. All other trademarks are the property of their respective owners and used with permission.

This manual MUST accompany the equipment at all times. This manual is considered a permanent part of the equipment and should remain with the unit if resold.

The information and specifications included in this publication were in effect at the time of approval for printing. Illustrations, descriptions, references and technical data contained in this manual are for guidance only and may not be considered as binding. Multiquip Inc. reserves the right to discontinue or change specifications, design or the information published in this publication at any time without notice and without incurring any obligations.

Your Local Dealer is:

MULTIQUIP